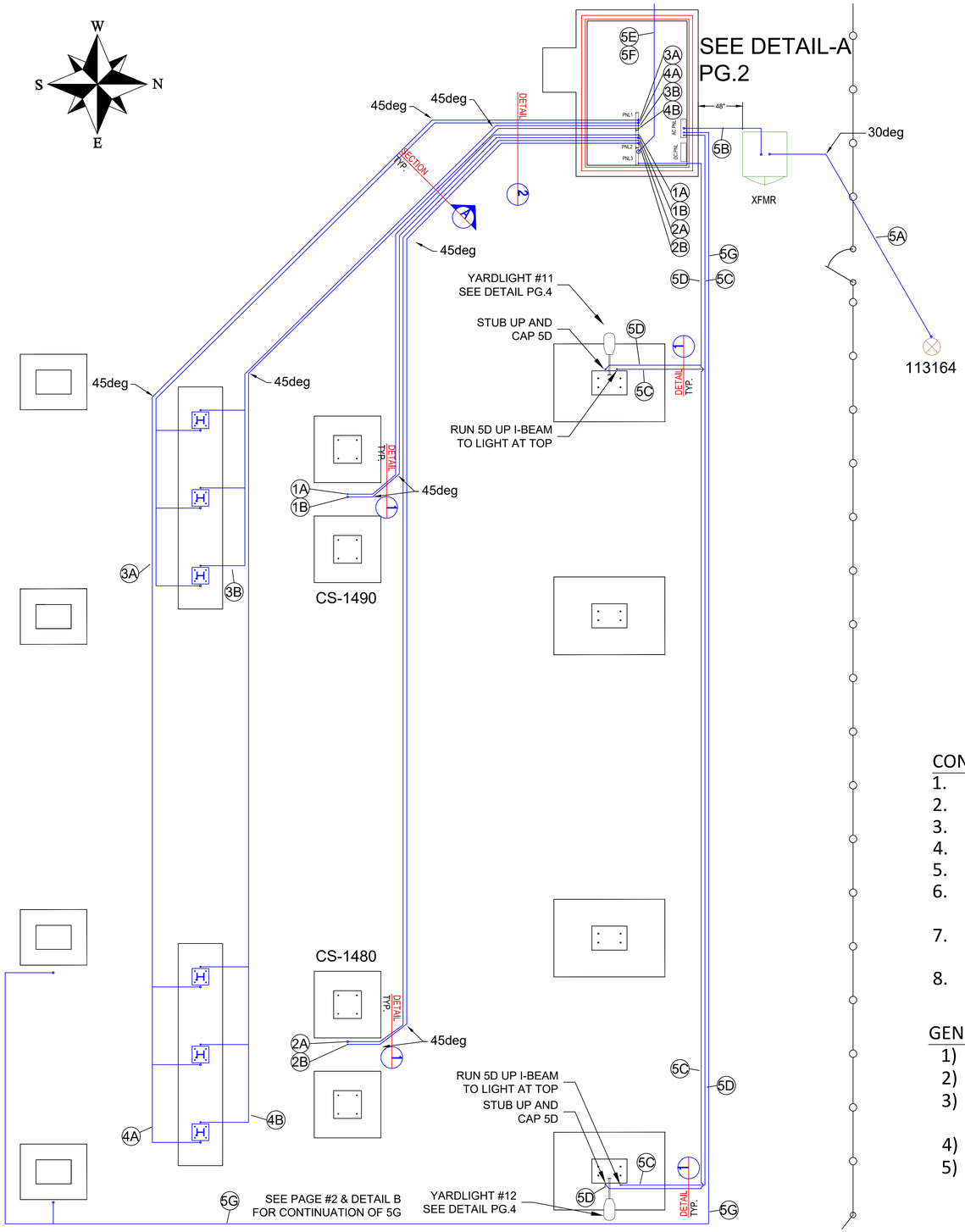

LIBERTY STATION CONDUIT SCHEDULE

CIRCUIT SWITCHER 1490

FUNCTION	# COND	SIZE	TYPE	MFG	P/N	FROM	TO	CONDUIT ID	CONDUIT	MIN LENGTH(ft)
AC	1	#10/3C	XLPE	GENERAL CABLE	224110	AC PANEL	CS-1490	**1A**	1"	70
DC	1	#4/2C	XLPE	HOUSTON WIRE	HW157 00803	DC PANEL	CS-1490	**1B**	2"	70
CONTROL	1	#10/12C	XLPE	GENERAL CABLE	347070	RELAYING PANEL #1	CS-1490			

CIRCUIT SWITCHER 1480

FUNCTION	# COND	SIZE	TYPE	MFG	P/N	FROM	TO	CONDUIT ID	CONDUIT	MIN LENGTH
AC	1	#10/3C	XLPE	GENERAL CABLE	224110	AC PANEL	CS-1480	**2A**	1"	120
DC	1	#4/2C	XLPE	HOUSTON WIRE	HW157 00803	DC PANEL	CS-1480	**2B**	2"	120
CONTROL	1	#10/12C	XLPE	GENERAL CABLE	347070	RELAYING PANEL #2	CS-1480			

CS-1490 - WEST FEEDER CT/PT

FUNCTION	# COND	SIZE	TYPE	MFG	P/N	FROM	TO	CONDUIT ID	CONDUIT	MIN LENGTH
CT-AØ	1	#10/4C	SHLD	GENERAL CABLE	4430.1004S1	RELAY PANEL #1	CMU-AØ	**3A**	2"	90
CT-BØ	1	#10/4C	SHLD	GENERAL CABLE	4430.1004S1	RELAY PANEL #1	CMU-BØ			
CT-CØ	1	#10/4C	SHLD	GENERAL CABLE	4430.1004S1	RELAY PANEL #1	CMU-CØ			
PT-AØ	1	#10/3C	XLPE	HOUSTON WIRE	224100	RELAY PANEL #1	CMU-AØ	**3B**	1.5"	90
PT-BØ	1	#10/3C	XLPE	HOUSTON WIRE	224100	RELAY PANEL #1	CMU-BØ			
PT-CØ	1	#10/3C	XLPE	HOUSTON WIRE	224100	RELAY PANEL #1	CMU-CØ			

CS-1480 - EAST FEEDER CT/PT

FUNCTION	# COND	SIZE	TYPE	MFG	P/N	FROM	TO	CONDUIT ID	CONDUIT	MIN LENGTH
CT-AØ	1	#10/4C	SHLD	GENERAL CABLE	4430.1004S1	RELAY PANEL #2	CMU-AØ	**4A**	2"	130
CT-BØ	1	#10/4C	SHLD	GENERAL CABLE	4430.1004S1	RELAY PANEL #2	CMU-BØ			
CT-CØ	1	#10/4C	SHLD	GENERAL CABLE	4430.1004S1	RELAY PANEL #2	CMU-CØ			
PT-AØ	1	#10/3C	XLPE	HOUSTON WIRE	224100	RELAY PANEL #2	CMU-AØ	**4B**	1.5"	130
PT-BØ	1	#10/3C	XLPE	HOUSTON WIRE	224100	RELAY PANEL #2	CMU-BØ			
PT-CØ	1	#10/3C	XLPE	HOUSTON WIRE	224100	RELAY PANEL #2	CMU-CØ			

LIBERTY STATION

FUNCTION	# COND	SIZE	TYPE	MFG	P/N	FROM	TO	CONDUIT ID	CONDUIT	MIN LENGTH (ft)
STA. POWER	3	1/0	15KV PRI	OKONITE	16-23-3072	POLE 113164	STATION PWR XFMR	**5A**	2"	100
STA. POWER	3	4/0	XLPE	GENERAL CABLE	11298.5151	STATION PWR XFMR	AC PANEL	**5B**	2"	30
YARD LIGHTS #1	2	#10/3C	XLPE	GENERAL CABLE	224110	AC PANEL	YARDLIGHT #1 & 2	**5C**	1-1/4"	120
CAMERA (FUTURE)	N/A	N/A	N/A	N/A	N/A	PANEL #3	A-FRAME #1 & #2	**5D**	1"	120
PUD FIBER	1	27-STR				PANEL #3	PUD FIBER VAULT	**5E**	4"	230
BPA FIBER	1	27-STR				PANEL #3	BPA FIBER VAULT	**5F**		
YARDLIGHTS	1	#10/3C	XLPE	GENERAL CABLE	224110	AC PANEL	EAST/WEST A-FRAMES	**5G**	1"	300
YARD LIGHT #21	1	#10/3C	XLPE	GENERAL CABLE	224110	YARDLIGHT #2 J-BOX	YARDLIGHT #21	**5H**	1"	40
YARD LIGHT #22	1	#10/3C	XLPE	GENERAL CABLE	224110	YARDLIGHT #2 J-BOX	YARDLIGHT #22	**5I**	1"	60

CONDUIT NOTES:

1. CONTRACTOR TO INSTALL ALL CONDUIT.
2. PUD CREWS WILL PULL ALL WIRE **EXCEPT FOR** CONDUITS 5A & 5B.
3. CONDUIT 5A & 5B CONTRACTOR INSTALLS CONDUIT AND WIRE.
4. CONTRACTOR TO INSTALL RISER AT POLE 113164.
5. 25KVA TRANSFORMER: CONTRACTOR TO INSTALL PAD, SCOOP, GROUND ROD AND TRANSFORMER
6. CONDUIT 5F RUNS FROM VAULT TO POLE 11343, CONTRACTOR TO INSTALL NEW RISER UP 11343, CABLE CONTINUES AERIALLY FROM THERE. SEE PAGE 3, DWG E6-1-3.
7. CABLE 5F IS A NEW FIBER CABLE AND RUNS CONTINUOUS (NO BREAKS OR SPLICES) FROM PANEL #3 TO BPA VAULT. SEE PAGE 3, E6-1-3
8. PUD WILL TERMINATE FIBER.

GENERAL NOTES:

1) ALL ABOVE GROUND CONDUIT TO BE RGS
2) ALL BELOW GROUND CONDUIT TO BE SCH 80 PVC
3) REFER TO THE CONSTRUCTION SPECIFICATIONS FOR PVC SCHEULE AND INSTALLATION AND MATERIAL REQUIREMENTS
4) CONDUITS SHALL BE BURIED A MINIMUM OF 24" BELOW GRADE.
5) ALL RGS CONDUIT TERMINATIONS AT EQUIPMENT ABINETS, JUNCTION BOXES, PULL BOXES, VAULTS, ETC,. SHALL BE RPOVIDED WITH GROUNDING BUSHINGS. GROUNDING BUSHING SHALL BE CONNECTED TO GROUND BUS BARS OR GROUND GRID.

REV	REVISIONS	DATE	DRN	DSGN	CKD	APPD
0	ISSUED FOR CONSTRUCTION	12/6/23	BENP	BENP		

REFERENCE DRAWINGS	
E5-1	STATION GROUNDING PLAN
E4-3	CONTROL HOUSE FOUNDATION

DSGN	BENP	7/2022
DRN	BENP	7/2022
CKD		
SCALE:	N.T.S.	

CLALLAM COUNTY PUD — Bringing Energy To Life™

CLALLAM COUNTY PUD

LIBERTY STATION

WIRE & CONDUIT SCHEDULE

JOB NUMBER 21-2316

REV 0

DRAWING NUMBER E6-1-1

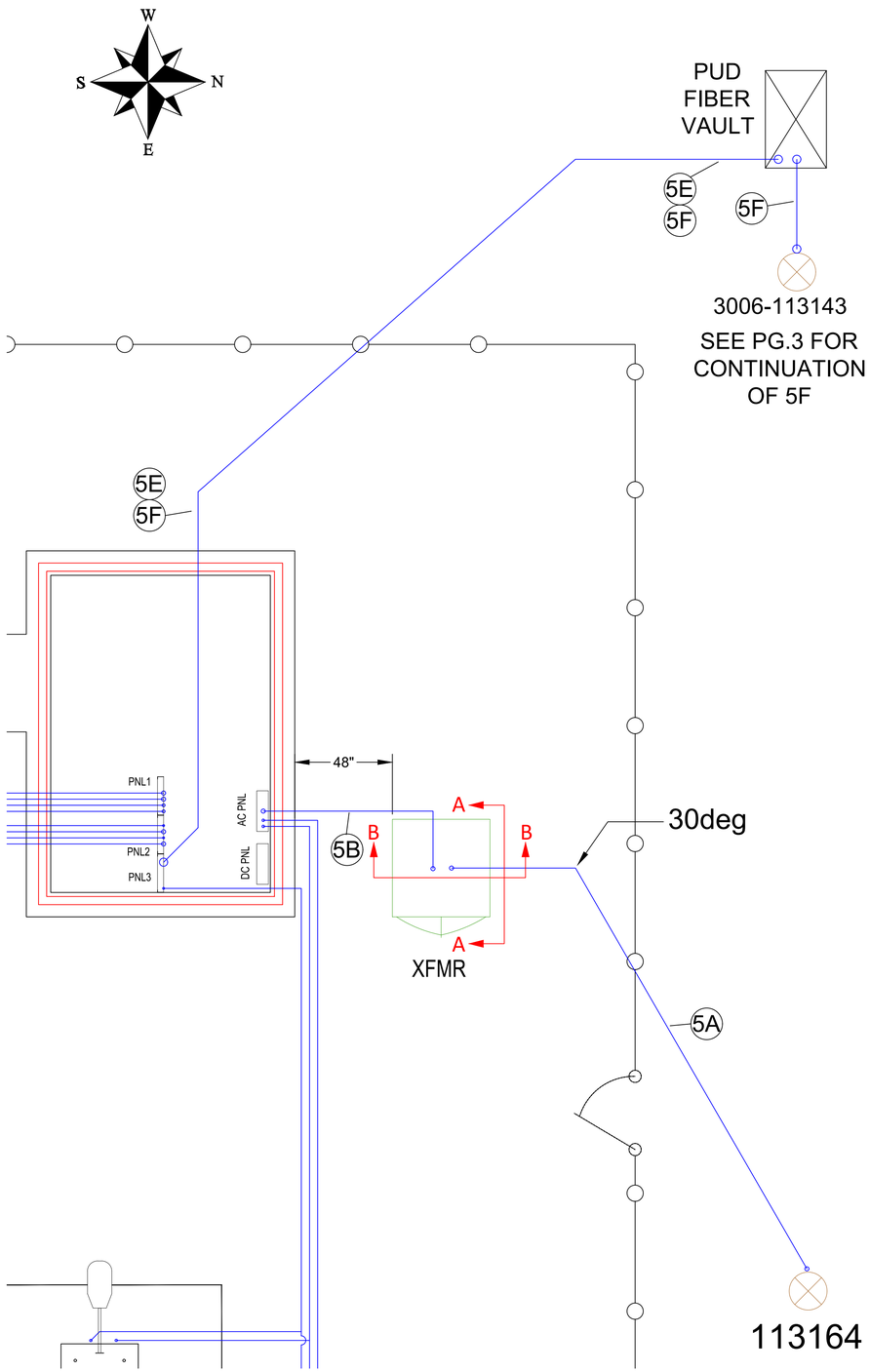

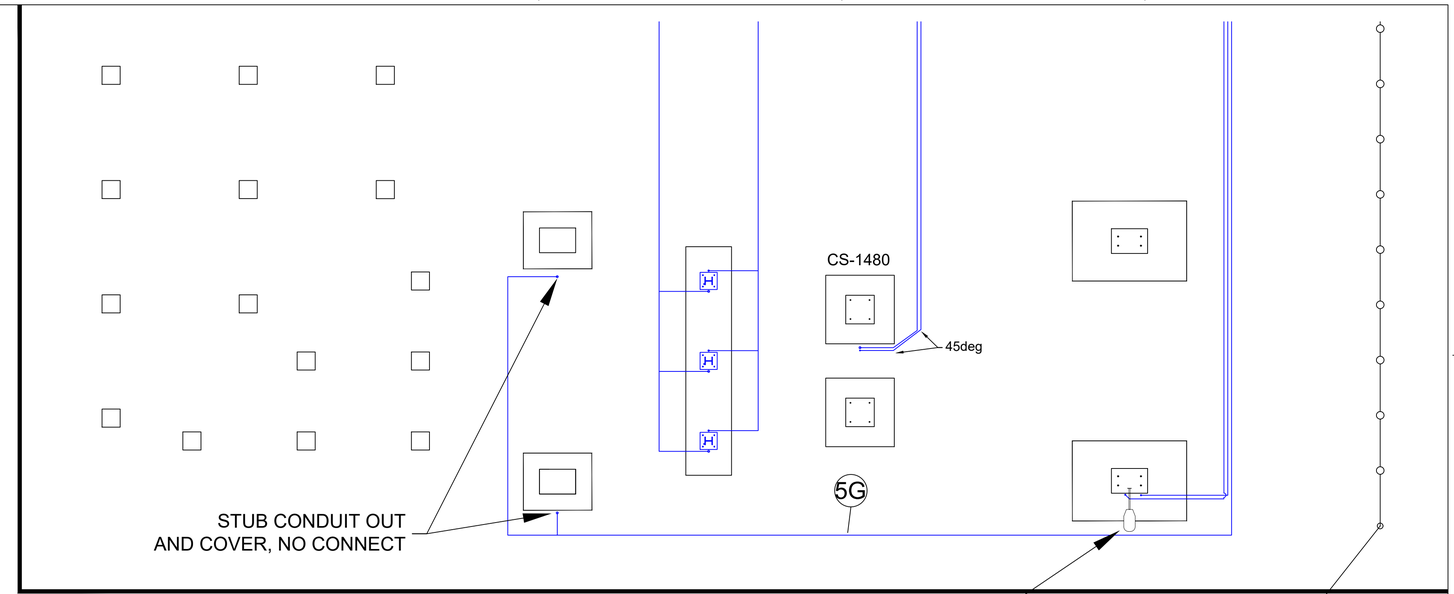

SEE YARDLIGHT MOUNTING
PAGE E6-1-4

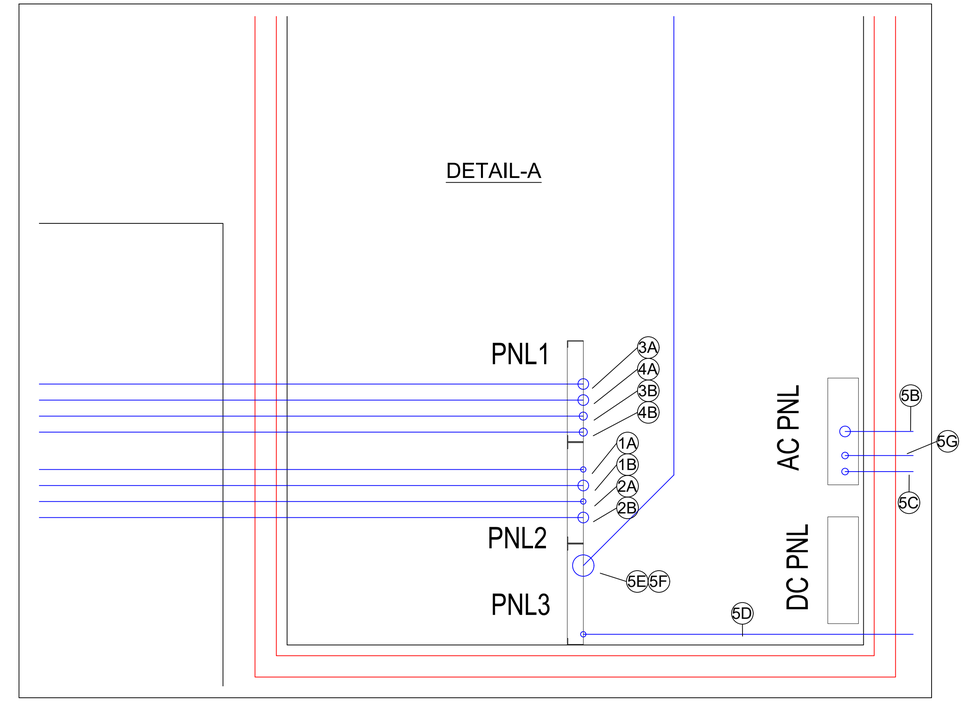

REV	REVISIONS	DATE	DRN	DSGN	CKD	APPD	REFERENCE DRAWINGS	
							E5-1	STATION GROUNDING PLAN
0	ISSUED FOR CONSTRUCTION	12/6/23	BENP	BENP			E4-3	CONTROL HOUSE FOUNDATION

DSGN	BENP	7/2022
DRN	BENP	7/2022
CKD		
SCALE:	N.T.S.	

CLALLAM COUNTY PUD
Bringing Energy To Life™

CLALLAM COUNTY PUD

LIBERTY STATION

WIRE & CONDUIT
SCHEDULE - FIBER & STATION POWER

JOB NUMBER 21-2316

REV 0

DRAWING NUMBER E6-1-2

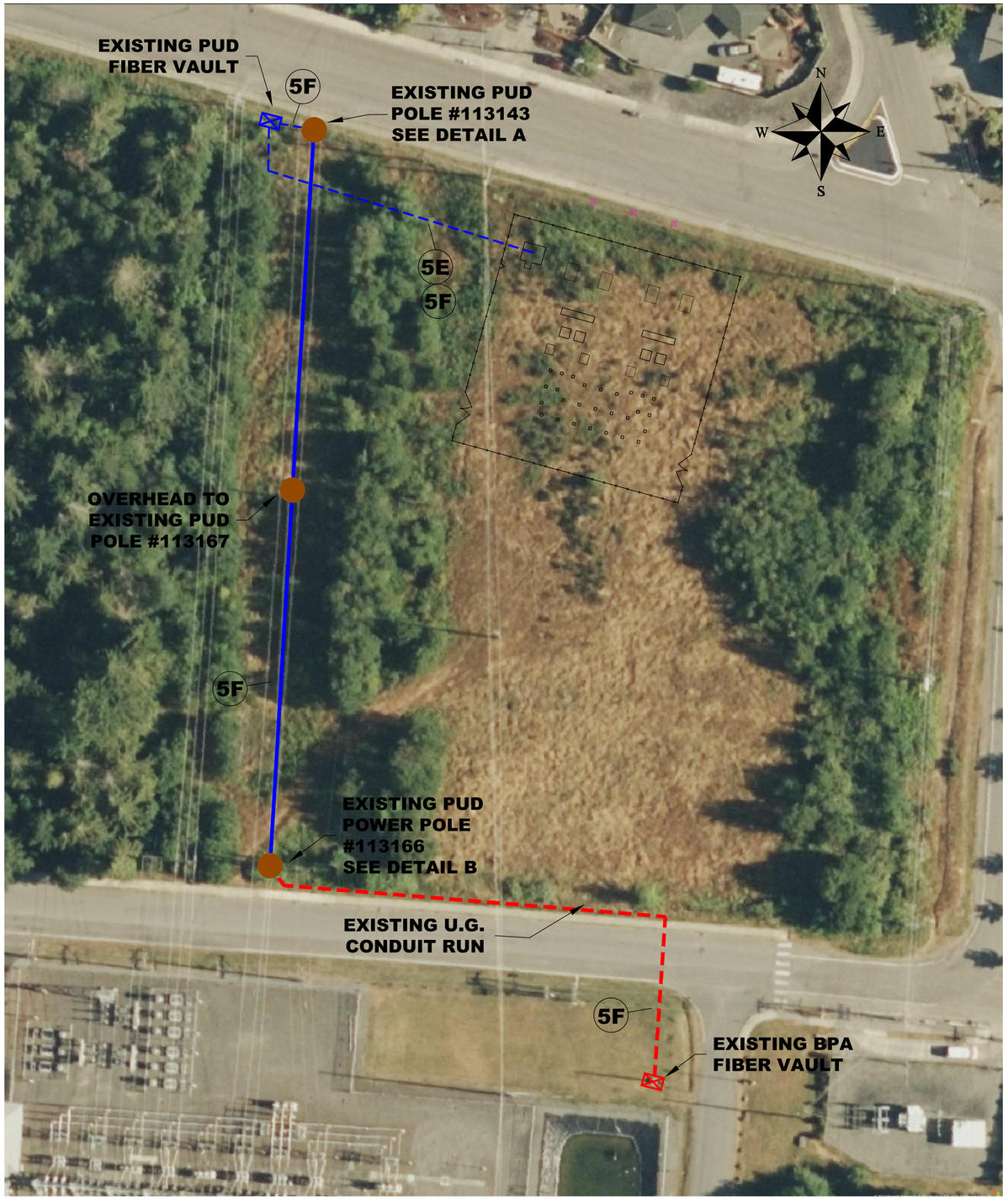

DETAIL-A: POLE 113143

1) INSTALL NEW RISER UP POLE 113143.
2) INSTALL FIBER DEAD-END
3) LINE 5F CONTINUES OVERHEAD TO EXISTING POLE 113167 & 113160.

DETAIL-B: POLE 113166

1) INSTALL NEW FIBER DEAD-END AT 113166.
2) NEW FIBER CABLE 5F RUNS INTO EXISTING PULL DUCTS AT THIS LOCATIONS AND CONTINUES TO BPA FIBER VAULT IN EXISTING CONDUIT/PULL DUCT.

NOTES:

1) CABLE 5F IS NEW 27STR FIBER CABLE THAT RUNS CONTINUOUS (NO SPLICES OR BREAKS) FROM CONTROL HOUSE PANEL #3 TO BPA FIBER FAULT. PATH IS AS FOLLOWS.
1. PANEL #3 UNDERGROUND TO PUD FIBER VAULT
2. PUD FIBER VAULT UNDERGROUND TO POLE 113143
3. RISER UP POLE 113143 AND AERIAL TO POLE 113167 AND POLE 113166
4. POLE 113166 TO EXISTING FIBER DUCT RISER
5. DOWN RISER, AND UNDERGROUND IN EXISTING FIBER DUCT TO BPA FIBER VAULT
6. CONTRACTOR INSTALLS CABLE ONLY. PUD WILL TERMINATE.

REV	REVISIONS	DATE	DRN	DSGN	CKD	APPD	REFERENCE DRAWINGS
0	ISSUED FOR CONSTRUCTION	12/6/23	BENP	BENP			

DSGN	BENP	7/2022
DRN	BENP	7/2022
CKD		
SCALE:	N.T.S.	

CLALLAM COUNTY PUD Bringing Energy To Life™

CLALLAM COUNTY PUD

LIBERTY STATION

WIRE & CONDUIT SCHEDULE FIBER

JOB NUMBER 21-2316

REV 0

DRAWING NUMBER E6-1-3

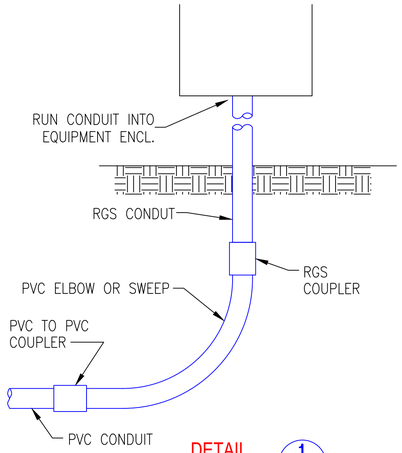

DETAIL 1

TYPICAL STUB-UP WITH ABOVE GRADE CONTROL CONDUIT AT EQUIPMENT

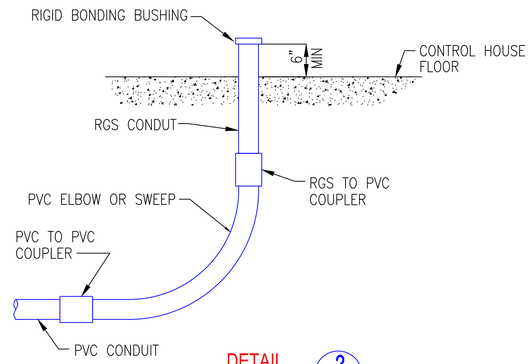

DETAIL 2

TYPICAL STUB-UP WITH ABOVE GRADE CONTROL CONDUIT IN CONTROL HOUSE

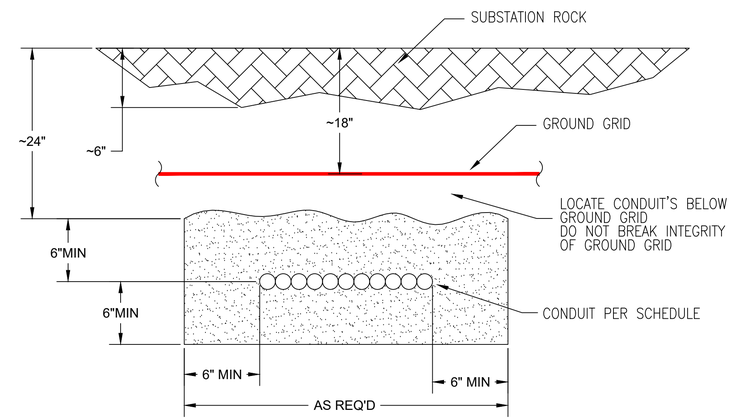

SECTION A

TYP CONTROL
CONDUIT TRENCH

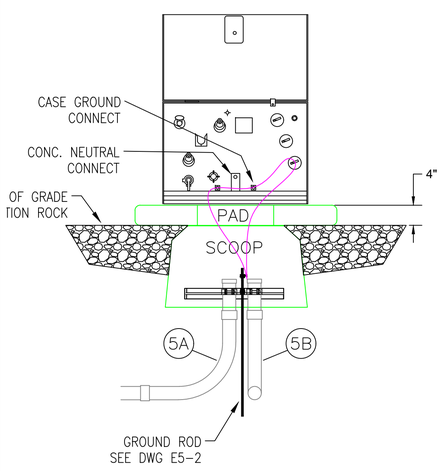

SECTION A-A

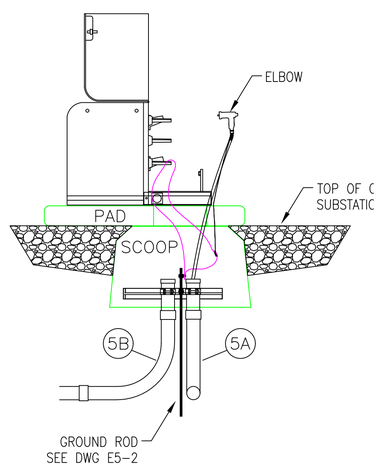

SECTION B-B

CONTROL HOUSE AC PANEL

INSTALL CONDUITS 5B, 5C & 5G
FROM FLOOR STUB-OUT TO AC PANEL

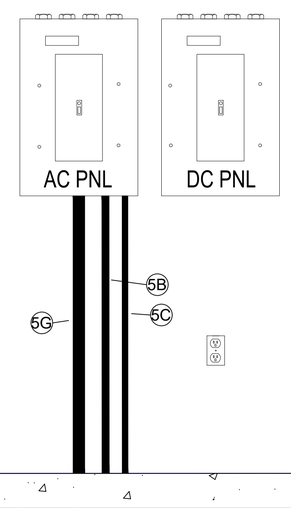

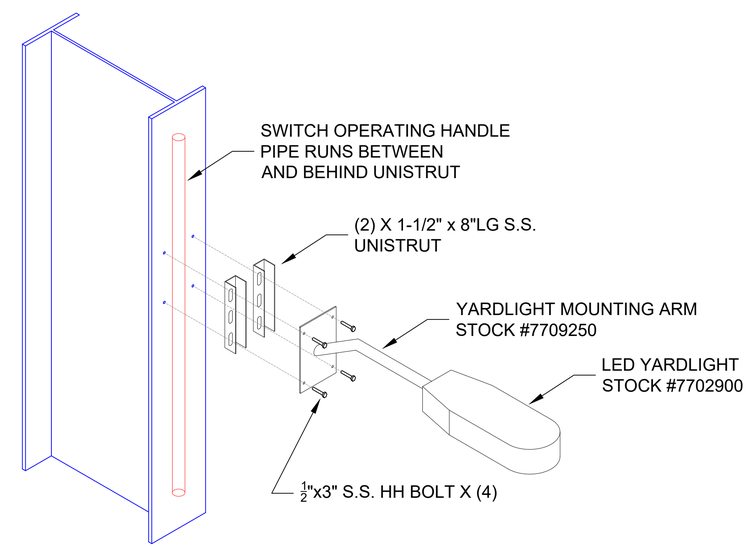

YARDLIGHT MOUNTING DETAIL

TYP. OF LIGHTS #11 & 12

REV	REVISIONS	DATE	DRN	DSGN	CKD	APPD	REFERENCE DRAWINGS	
0	ISSUED FOR CONSTRUCTION	12/6/23	BENP	BENP			E5-1	STATION GROUNDING PLAN
							E4-3	CONTROL HOUSE FOUNDATION

DSGN	BENP	7/2022
DRN	BENP	7/2022
CKD		
SCALE:	N.T.S.	

CLALLAM COUNTY PUD
Bringing Energy To Life™

CLALLAM COUNTY PUD

LIBERTY STATION

WIRE & CONDUIT
DETAIL SECTIONS

JOB NUMBER 21-2316

REV 0

DRAWING NUMBER E6-1-4