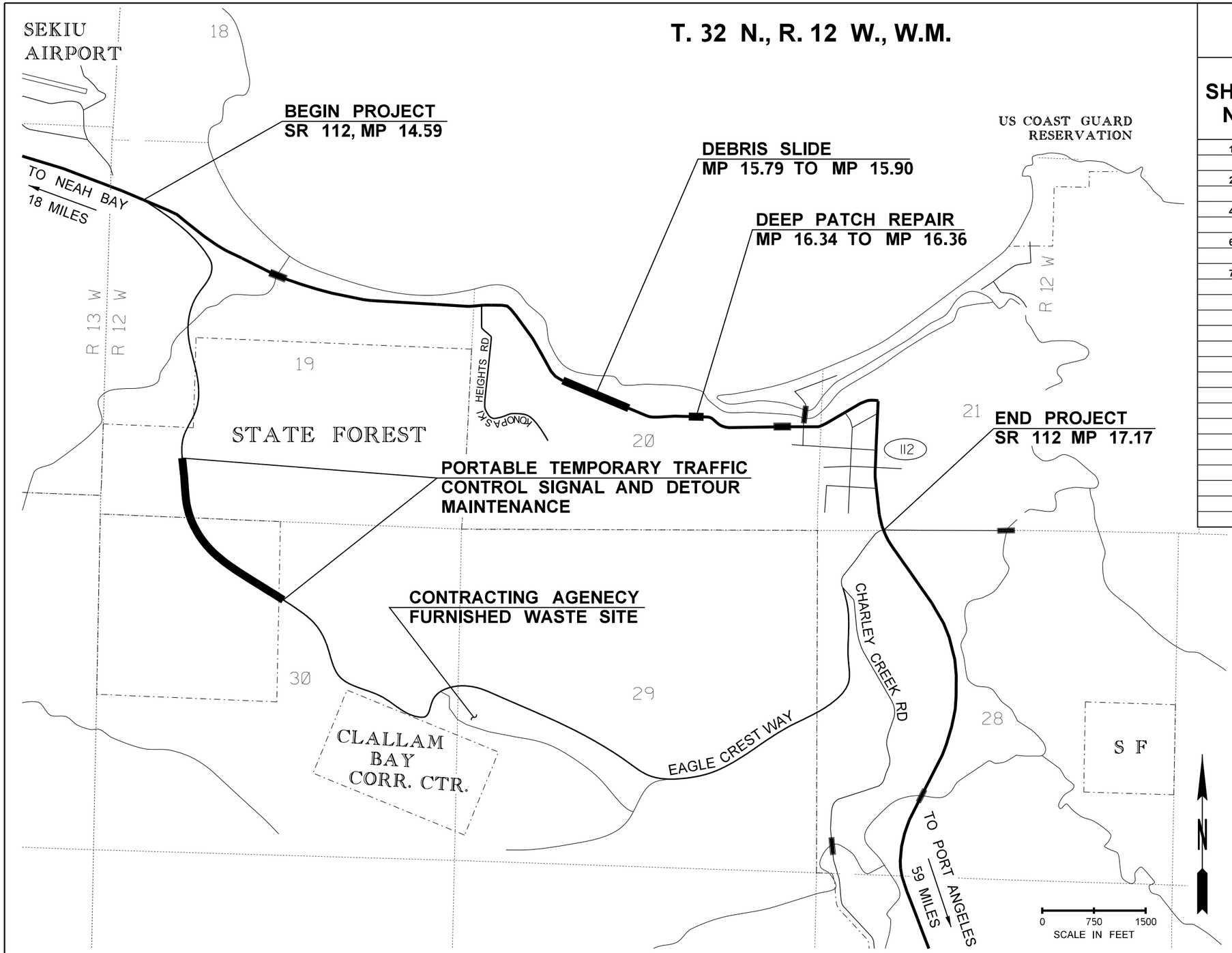

INDEX

SHEET NO.	PLAN REFERENCE NO.	TITLE
1	VM1	INDEX / VICINITY MAP
2 - 3	SQ1 - SQ2	SUMMARY OF QUANTITIES
4 - 5	RS1 - RS2	ROADWAY SECTIONS
6	SR1	SLIDE REMOVAL
7	TCP1	TRAFFIC CONTROL PLAN

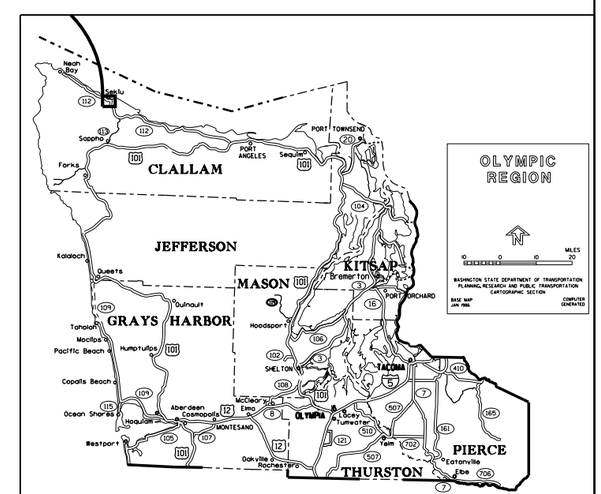

FILE NAME	G:\2 PSE\XL6517 SR 112 Clallam Bay - Emergency Repair\CAE\CAD\ContractPlans\020-VicinityIndex\XL6517_PS_VM.dgn						
TIME	2:04:55 PM				REGION NO. 10	STATE WASH	FED.AID PROJ.NO.
DATE	1/14/2022						
PLOTTED BY	mckernd				JOB NUMBER 22C501		
DESIGNED BY	S. LEZA						
ENTERED BY	S. LEZA						
CHECKED BY	J. TAX, P.E.				CONTRACT NO.		LOCATION NO. XL6517
PROJ. ENGR.	D. MCKERNAN, P.E.						
REGIONAL ADM.	S. ROARK, P.E.	REVISION	DATE	BY			

P.E. STAMP BOX DATE

P.E. STAMP BOX DATE

Washington State Department of Transportation

SR 112
CLALLAM BAY
EMERGENCY REPAIR

INDEX / VICINITY MAP

PLAN REF NO
VM1

SHEET 1 OF 7 SHEETS

SUMMARY OF QUANTITIES

DOT_RGG900

1/14/2022

ITEM NO	TOTAL QUANTITY	SUB-TOTAL * SECTION I-07.2(1) OF STANDARD SPECS	SUB-TOTAL ** SECTION I-07.2(2) OF STANDARD SPECS	STD. ITEM NO.	UNIT	ITEM	GROUP 1 SR 112 MP 15.79 TO 15.90	GROUP 2 SR112 MP 16.30 TO 16.35	GROUP 3 SR 112 EAGLE CREST RD DETOUR	GROUP 4 THIRD PARTY DAMAGES
						PREPARATION				
1	LUMP SUM		LUMP SUM	0001	L.S.	MOBILIZATION	L.S.	L.S.	L.S.	
2	313.00		313.00	0170	L.F.	REMOVING GUARDRAIL	225.00	88.00		
3	LUMP SUM		LUMP SUM	0250	L.S.	REMOVAL AND DISPOSAL OF ASBESTOS MATERIAL		L.S.		
						GRADING				
4	62.00		62.00	0310	C.Y.	ROADWAY EXCAVATION INCL. HAUL	62.00			
5	40000.00		40000.00		C.Y.	SLIDE EXCAVATION INCL. HAUL	40,000.00			
6	786.00		786.00		TON	BORROW FOR GEOSYNTHETIC REINF. DEEP PATCH INCL. HAUL		786.00		
						DRAINAGE				
7	370.00		370.00	1086	TON	QUARRY SPALLS	340.00	30.00		
8	120.00		120.00	3016	L.F.	HIGH-DENSITY POLYETHYLENE (HDPE) PIPE 12 IN. DIAM.	120.00			
9	105.00		105.00	3017	L.F.	HIGH-DENSITY POLYETHYLENE (HDPE) PIPE 18 IN. DIAM.	60.00	45.00		
						STRUCTURE				
10	425.00		425.00	4006	C.Y.	STRUCTURE EXCAVATION CLASS A INCL. HAUL		425.00		
						SURFACING				
11	700.00		700.00	5100	TON	CRUSHED SURFACING BASE COURSE	370.00	230.00	100.00	
						HOT MIX ASPHALT				
12	362.00		362.00	5767	TON	HMA CL. 1/2 IN. PG	310.00	52.00		
13	1.00		1.00	5837	DOL	ASPHALT COST PRICE ADJUSTMENT	1.00			
						EROSION CONTROL AND ROADSIDE PLANTING				
14	LUMP SUM		LUMP SUM	6488	L.S.	EROSION CONTROL AND WATER POLLUTION PREVENTION	L.S.			
15	9.00		9.00	6403	DAY	ESC LEAD	9.00			
16	5.53		5.53	6414	ACRE	SEEDING, FERTILIZING, AND MULCHING	5.53			
17	12250.00		12250.00	6455	S.Y.	EROSION CONTROL BLANKET	12,250.00			
						TRAFFIC				
18	313.00		313.00	6757	L.F.	BEAM GUARDRAIL TYPE 31	225.00	88.00		
19	6.00		6.00	6832	EACH	FLEXIBLE GUIDE POST	6.00			
20	1915.00		1915.00	6806	L.F.	PAINT LINE	1,740.00	175.00		
21	10000.00		10000.00		DOL	PORTABLE TEMPORARY TRAFFIC CONTROL SIGNAL			10,000.00	
22	2688.00		2688.00	6993	HR	PORTABLE CHANGEABLE MESSAGE SIGN			2,688.00	
23	LUMP SUM		LUMP SUM	6973	L.S.	OTHER TEMPORARY TRAFFIC CONTROL			L.S.	
24	480.00		480.00	6980	HR	FLAGGERS			480.00	
25	480.00		480.00	6992	HR	OTHER TRAFFIC CONTROL LABOR			480.00	
26	LUMP SUM		LUMP SUM	6974	L.S.	TRAFFIC CONTROL SUPERVISOR			L.S.	
27	313.00		313.00	6982	S.F.	CONSTRUCTION SIGNS CLASS A	313.00			
						OTHER ITEMS				
28	210.00		210.00	7006	C.Y.	STRUCTURE EXCAVATION CLASS B INCL. HAUL	166.00	44.00		
29	LUMP SUM		LUMP SUM	7350	L.S.	CLEANING EXISTING DRAINAGE STRUCTURE	L.S.			
30	80000.00		80000.00		DOL	FORCE ACCOUNT MAINTENANCE OF DETOUR			80,000.00	
31	4000.00		4000.00	7480	DOL	ROADSIDE CLEANUP	2,000.00	2,000.00		

GROUP LEGEND

GROUP NUMBER	SR	CONTROL SECTION	TAX SCHEDULE	FUND PARTICIPANTS
1	112	053600	**	STATE
2	112	053600	**	STATE
3	112	053600	**	STATE
4	112	053600	**	STATE

DATE	REVISION	BY

REGION	STATE	FEDERAL AID PROJECT. NO.
10	WA	

JOB NUMBER 22C501/2

CONTRACT NO 000000

Washington State Department of Transportation

SR 112
CLALLAM BAY
EMERGENCY REPAIRS

SUMMARY OF QUANTITIES

SQ1

SHEET 2 OF 7 SHEETS

SUMMARY OF QUANTITIES

ITEM NO	TOTAL QUANTITY	SUB-TOTAL * SECTION I-07.2(1) OF STANDARD SPECS	SUB-TOTAL ** SECTION I-07.2(2) OF STANDARD SPECS	STD. ITEM NO.	UNIT	ITEM	GROUP 1 SR 112 MP 15.79 TO 15.90	GROUP 2 SR112 MP 16.30 TO 16.35	GROUP 3 SR 112 EAGLE CREST RD DETOUR	GROUP 4 THIRD PARTY DAMAGES
32	5.00		5.00	7725	DOL	REIMBURSEMENT FOR THIRD PARTY DAMAGE				5.00
33	3.00		3.00	7728	DOL	MINOR CHANGE	1.00	1.00	1.00	
34	3.00		3.00	7732	DOL	AGGREGATE COMPLIANCE PRICE ADJUSTMENT	1.00	1.00	1.00	
35	LUMP SUM		LUMP SUM	7736	L.S.	SPCC PLAN	L.S.	L.S.	L.S.	
36	255.00		255.00	7554	S.Y.	CONSTRUCTION GEOTEXTILE FOR PERMANENT EROSION CONTROL	255.00			
37	1150.00		1150.00		S.F.	TURF REINFORCEMENT MAT		1,150.00		
38	8200.00		8200.00		S.F.	INSTALLATION OF GEOGRID		8,200.00		

GROUP LEGEND

GROUP NUMBER	SR	CONTROL SECTION	TAX SCHEDULE	FUND PARTICIPANTS
1	112	053600	**	STATE
2	112	053600	**	STATE
3	112	053600	**	STATE
4	112	053600	**	STATE

DATE	REVISION	BY

REGION	STATE	FEDERAL AID PROJECT. NO.
10	WA	

JOB NUMBER 22C501/2

CONTRACT NO 000000

Washington State Department of Transportation

SR 112
CLALLAM BAY
EMERGENCY REPAIRS

SUMMARY OF QUANTITIES

SQ2

STRUCTURE NOTES - DRAINAGE

CODE	LOCATION	HIGH-DENSITY POLYETHYLENE (HDPE) PIPE 12 IN. DIAM.	HIGH-DENSITY POLYETHYLENE (HDPE) PIPE 18 IN. DIAM.	QUARRY SPALLS	STRUCTURE EXCAVATION CLASS B	CLEAN EXISTING DRAINAGE STRUCTURE	SEE GENERAL NOTES
		L.F.	L.F.	TON	C.Y.	L.S.	
RS1-A	SR 112 MP 15.83	60		10	54		1, 2, 4
RS1-B	SR 112 MP 15.85		60	10	58		1, 2, 4
RS1-C	SR 112 MP 15.87	60		10	54		1, 2, 4
RS1-D	SR 112 MP 15.90			10		1	2, 3
RS2-A	SR 112 MP 16.33		45	10	44		1, 2, 4

GENERAL NOTES:

1. SEE STANDARD SPECIFICATION 9-05.19
2. SEE STANDARD SPECIFICATION 9-13.1
3. SEE STANDARD SPECIFICATION 7-07
4. SEE STANDARD PLAN B-55.20-03

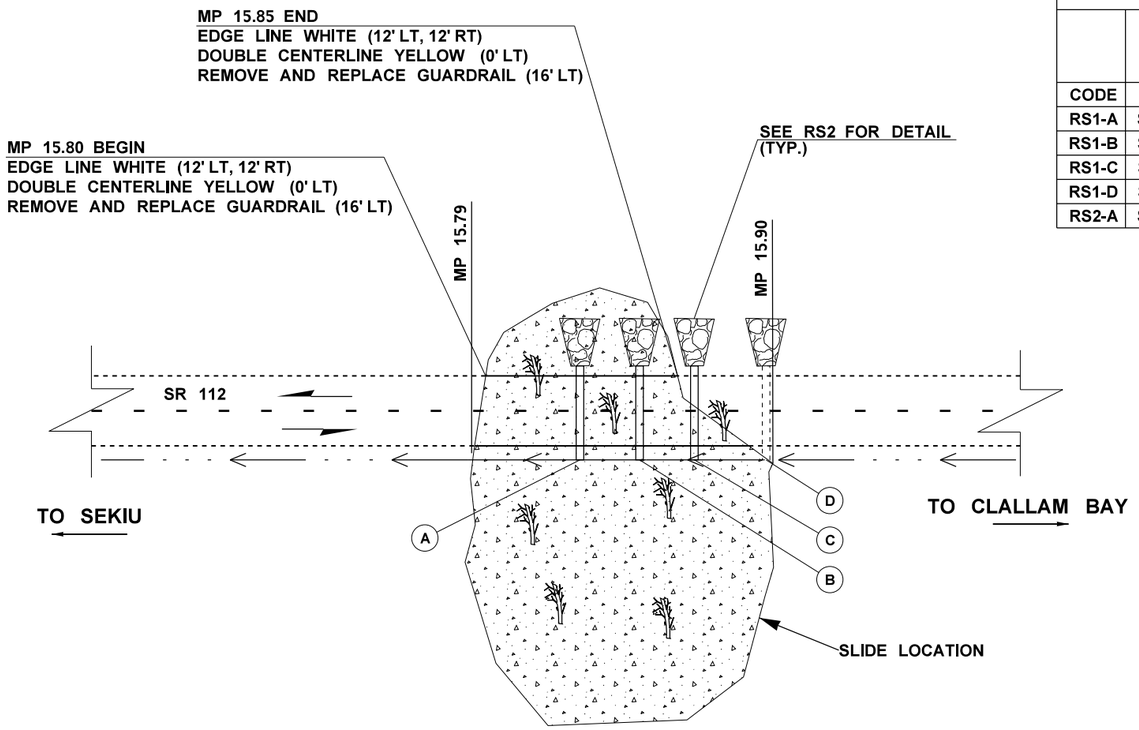

SR 112 PLAN VIEW

(NOT TO SCALE)

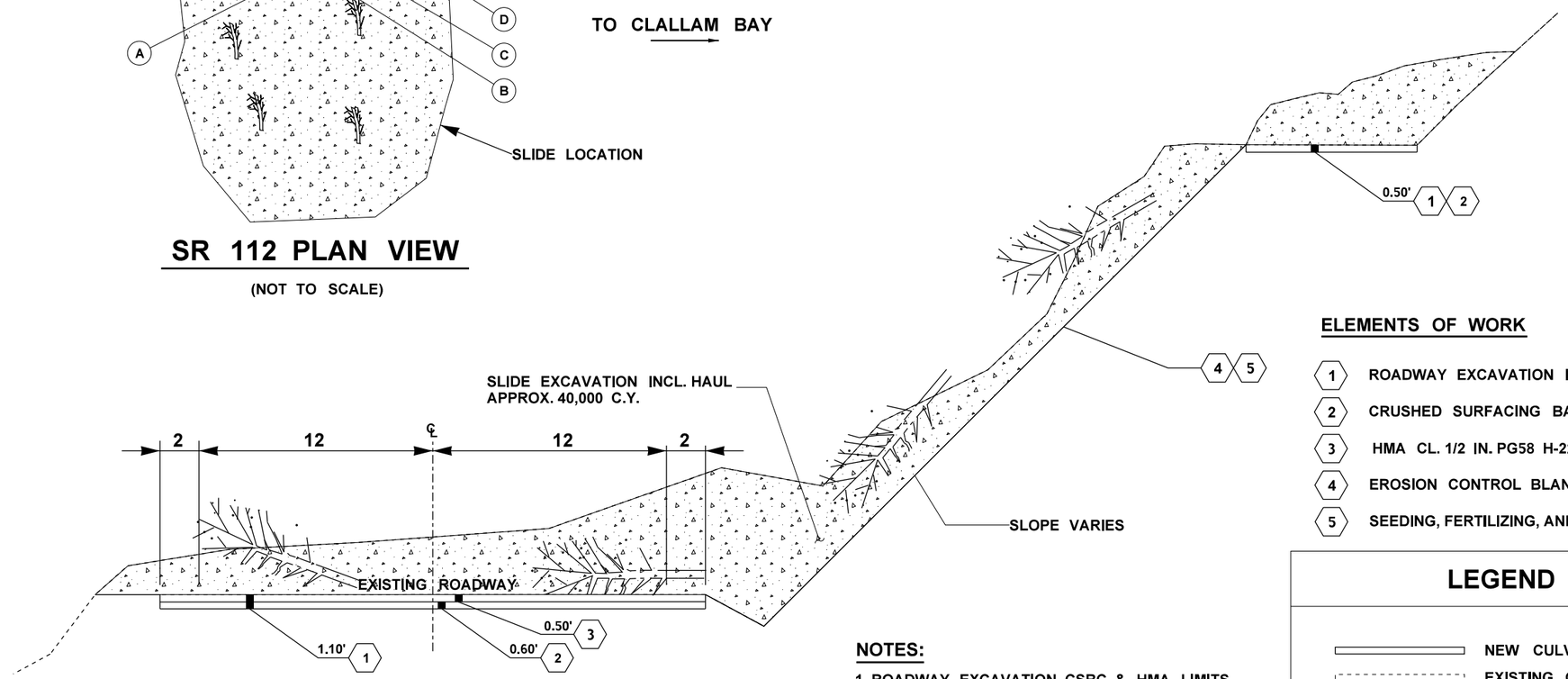

ROADWAY SECTION A

(NOT TO SCALE)
MP 15.79 TO MP 15.90

ELEMENTS OF WORK

1. ROADWAY EXCAVATION INCL. HAUL
2. CRUSHED SURFACING BASE COURSE
3. HMA CL. 1/2 IN. PG58 H-22
4. EROSION CONTROL BLANKET
5. SEEDING, FERTILIZING, AND MULCHING

NOTES:

1. ROADWAY EXCAVATION, CSBC, & HMA LIMITS ARE APPROXIMATELY MP 15.80 TO MP 15.85
2. ALL DIMENSIONS SHOWN ARE IN FEET UNLESS OTHERWISE DESIGNATED.

LEGEND

- NEW CULVERT
- EXISTING CULVERT
- DITCH LINE
- EXISTING DITCH
- SLIDE EXCAVATION

FILE NAME	G:\2 PSE\XL6517 SR 112 Clallam Bay - Emergency Repair\CAE\CAD\ContractPlans\050-RdwySec\PS_RS.dgn
TIME	1:26:07 PM
DATE	1/14/2022
PLOTTED BY	mckernd
DESIGNED BY	B. SLUIS
ENTERED BY	B. SLUIS
CHECKED BY	J. TAX, P.E.
PROJ. ENGR.	D. MCKERNAN, P.E.
REGIONAL ADM.	S. ROARK, P.E.

REVISION | DATE | BY

REGION NO. 10 | STATE WASH | FED.AID PROJ.NO.

JOB NUMBER 22C501

CONTRACT NO.

LOCATION NO. XL6517

DANIEL D. MCKERNAN, STATE OF WASHINGTON, 41402, REGISTERED PROFESSIONAL ENGINEER
Digitally signed by Dan McKernan
Date: 2022.01.14 13:25:40 -08'00'
DATE
P.E. STAMP BOX

DATE
P.E. STAMP BOX

Washington State Department of Transportation

SR 112
CLALLAM BAY
EMERGENCY REPAIRS

ROADWAY SECTIONS

Plot 2
PLAN REF NO RS1
SHEET 4 OF 7 SHEETS

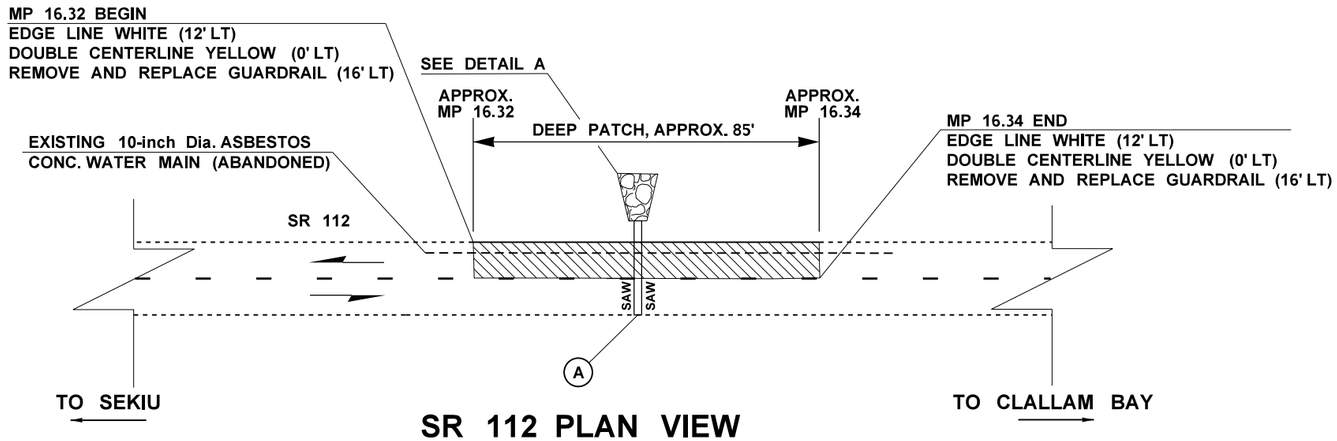

SR 112 PLAN VIEW

(NOT TO SCALE)

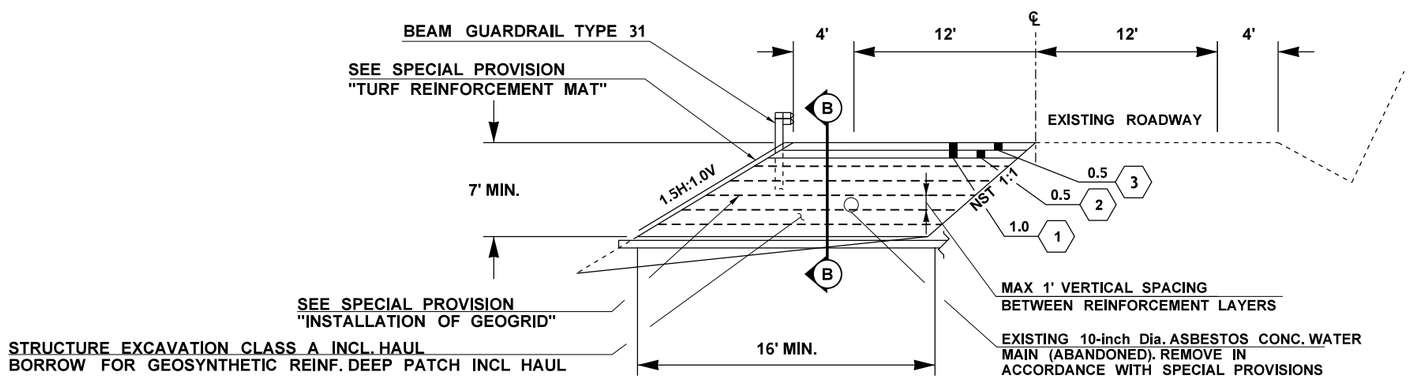

ROADWAY SECTION B

(NOT TO SCALE)
MP 16.33

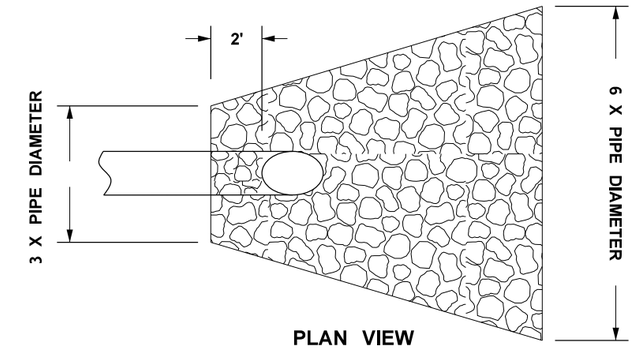

PLAN VIEW

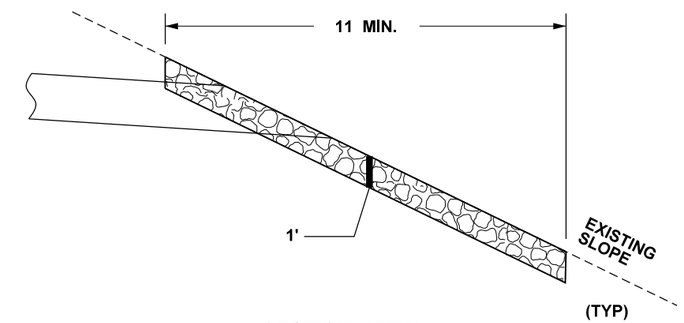

SECTION VIEW

DETAIL A (TYP.)

(NOT TO SCALE)

ELEMENTS OF WORK

1. ROADWAY EXCAVATION INCL. HAUL
2. CRUSHED SURFACING BASE COURSE
3. HMA CL. 1/2 IN. PG58 H-22

NOTES:

1. DEPTHS SHOWN ARE COMPACTED DEPTHS COURSE DEPTHS AND COMPACTION SHALL BE AS DEFINED IN THE STANDARD SPECIFICATIONS
2. ALL DIMENSIONS SHOWN ARE IN FEET UNLESS OTHERWISE DESIGNATED.

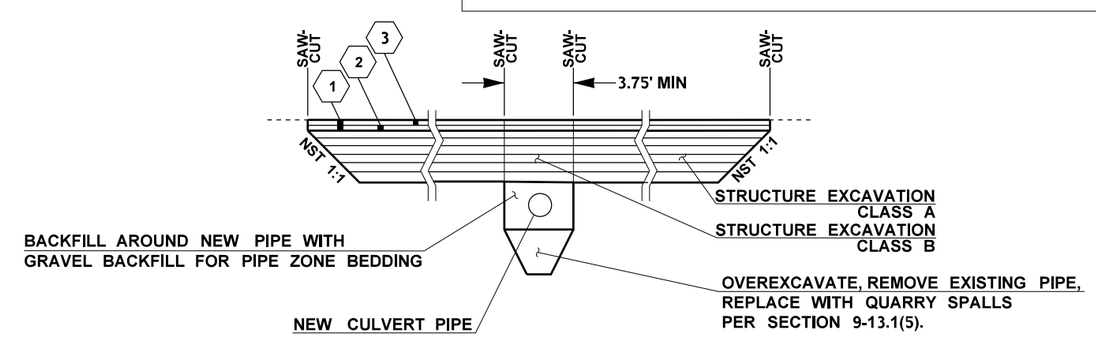

SR 112 PROFILE VIEW
SECTION B-B

(NOT TO SCALE)

FILE NAME	G:\2 PSE\XL6517 SR 112 Clallam Bay - Emergency Repair\CAE\CAD\ContractPlans\050-RdwySec\PS_RS.dgn				REGION NO. 10	STATE WASH	FED.AID PROJ.NO.
TIME	9:00:41 AM						
DATE	1/18/2022				JOB NUMBER 22C501		
PLOTTED BY	mckernd						
DESIGNED BY	B. SLUIS				CONTRACT NO.		LOCATION NO. XL6517
ENTERED BY	B. SLUIS						
CHECKED BY	J. TAX, P.E.						
PROJ. ENGR.	D. MCKERNAN, P.E.						
REGIONAL ADM.	S. ROARK, P.E.	REVISION	DATE	BY			

DANIEL D. McKERNAN, STATE OF WASHINGTON, 41402, REGISTERED PROFESSIONAL ENGINEER
Digitally signed by Dan McKernan Date: 2022.01.18 09:08:25 -08'00'
DATE
P.E. STAMP BOX

DATE
P.E. STAMP BOX

Washington State Department of Transportation

SR 112
CLALLAM BAY
EMERGENCY REPAIRS

ROADWAY SECTIONS

Plot 1
PLAN REF NO RS2
SHEET 5 OF 7 SHEETS

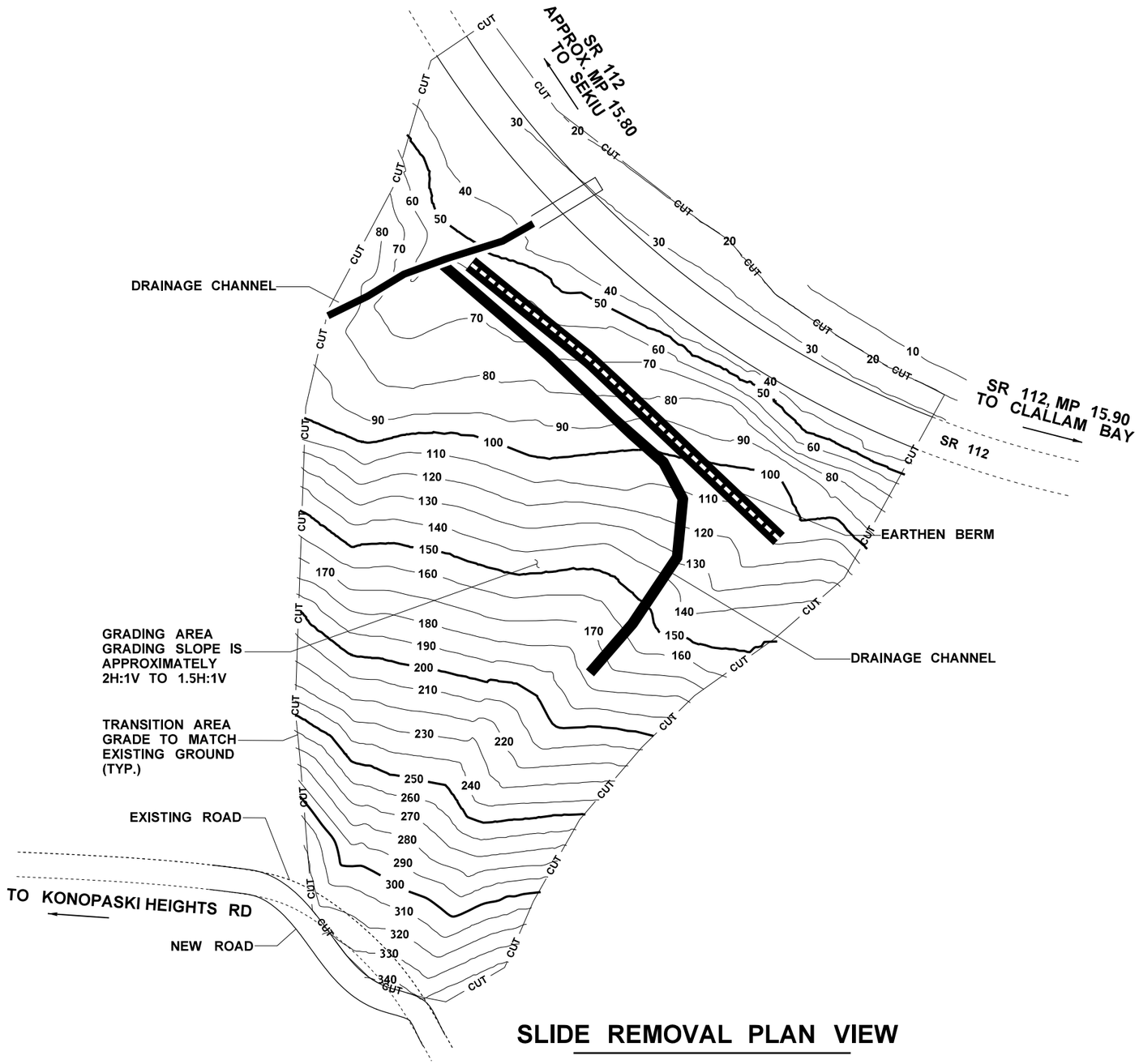

SLIDE REMOVAL PLAN VIEW

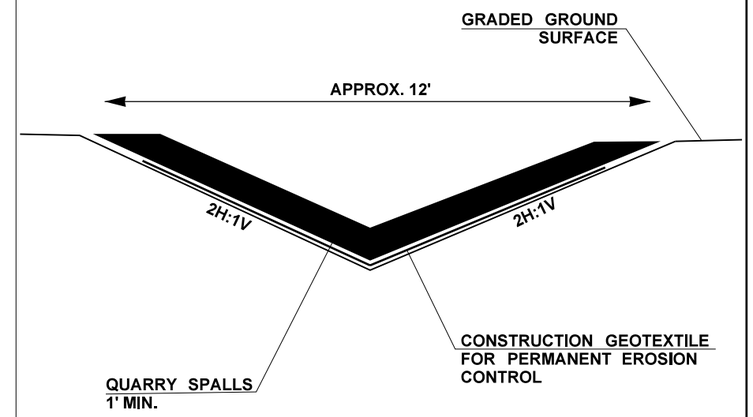

DRAINAGE CHANNEL DETAIL

(NOT TO SCALE)

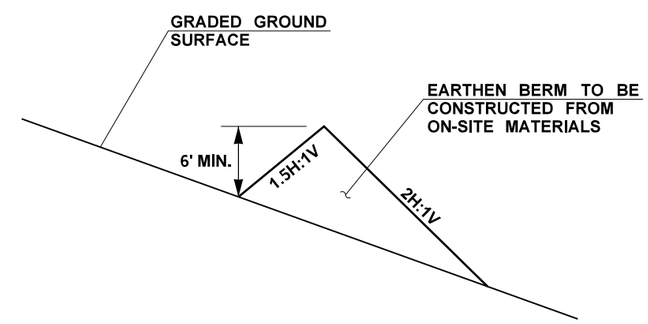

EARTHEN BERM DETAIL

(NOT TO SCALE)

LEGEND

150	INDEX CONTOUR
140	INTERMEDIATE CONTOUR
	NEW CULVERT

FILE NAME	G:\2 PSE\XL6517 SR 112 Clallam Bay - Emergency Repair\CAE\CAD\ContractPlans\100-SlideRemoval\SlideRemove_Details.dgn
TIME	1:34:03 PM
DATE	1/14/2022
PLOTTED BY	mckernd
DESIGNED BY	B. SLUIS
ENTERED BY	B. SLUIS
CHECKED BY	J. TAX, P.E.
PROJ. ENGR.	D. MCKERNAN, P.E.
REGIONAL ADM.	S. ROARK, P.E.

REVISION | DATE | BY

REGION NO. 10 | STATE WASH | FED.AID PROJ.NO.

JOB NUMBER 22C501

CONTRACT NO.

LOCATION NO. XL6517

DANIEL D. McKERNAN STATE OF WASHINGTON 41402 REGISTERED PROFESSIONAL ENGINEER

Digitally signed by Dan McKernan Date: 2022.01.14 13:35:08'00'

DATE

P.E. STAMP BOX

DATE

P.E. STAMP BOX

Washington State Department of Transportation

SR112
CLALLAM BAY
EMERGENCY REPAIRS

SLIDE REMOVAL

Plot 1

PLAN REF NO SR1

SHEET 6 OF 7 SHEETS

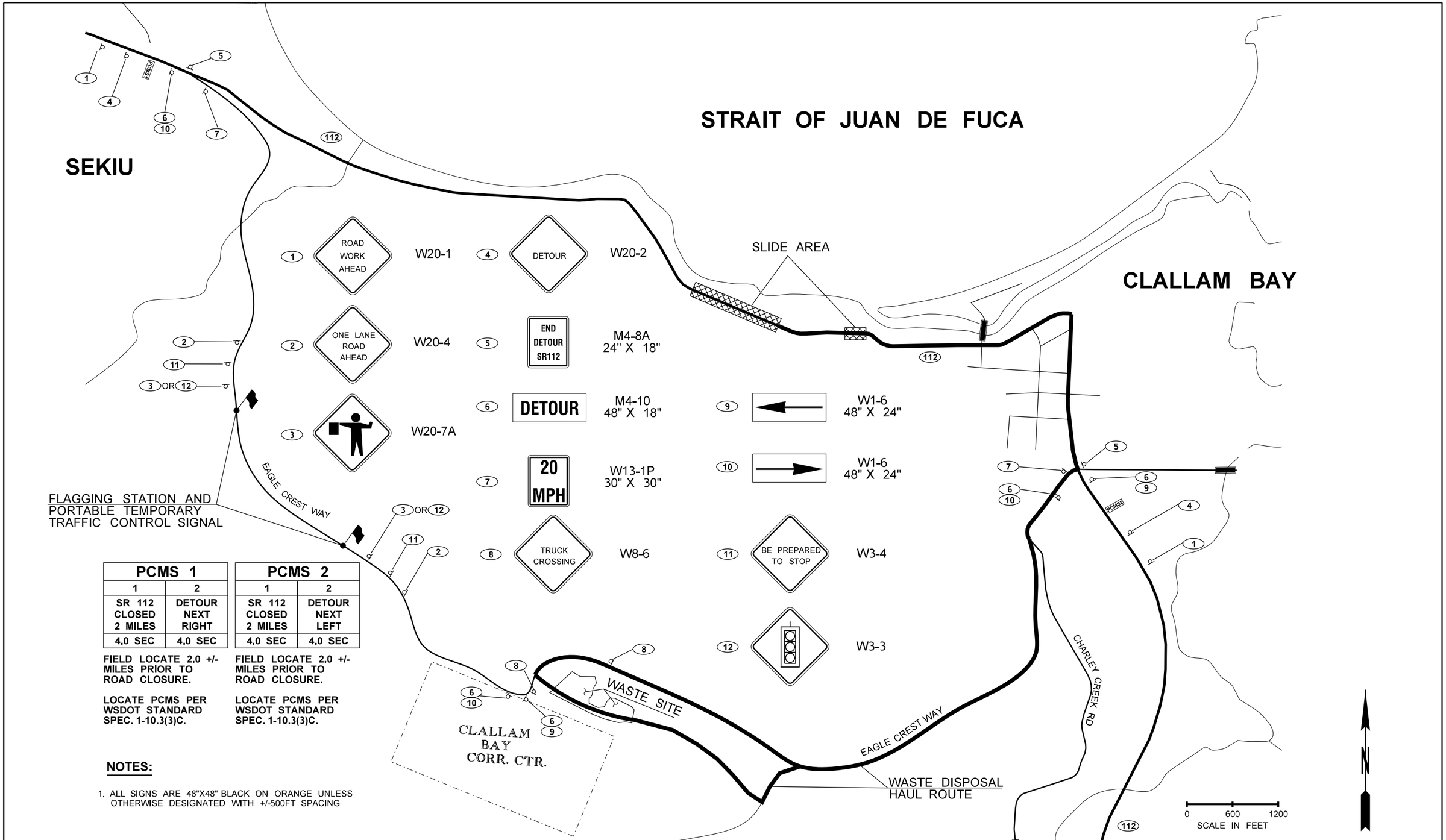

PCMS 1	
1	2
SR 112 CLOSED 2 MILES	DETOUR NEXT RIGHT
4.0 SEC	4.0 SEC

FIELD LOCATE 2.0 +/- MILES PRIOR TO ROAD CLOSURE.

LOCATE PCMS PER WSDOT STANDARD SPEC. 1-10.3(3)C.

PCMS 2	
1	2
SR 112 CLOSED 2 MILES	DETOUR NEXT LEFT
4.0 SEC	4.0 SEC

FIELD LOCATE 2.0 +/- MILES PRIOR TO ROAD CLOSURE.

LOCATE PCMS PER WSDOT STANDARD SPEC. 1-10.3(3)C.

NOTES:

1. ALL SIGNS ARE 48"X48" BLACK ON ORANGE UNLESS OTHERWISE DESIGNATED WITH +/-500FT SPACING

FILE NAME	G:\2 PSE\XL6517 SR 112 Clallam Bay - Emergency Repair\CAE\CAD\ContractPlans\410-WZTCPlan\PS_TCP.dgn
TIME	11:58:15 AM
DATE	1/14/2022
PLOTTED BY	mckernd
DESIGNED BY	B. SLUIS
ENTERED BY	B. SLUIS
CHECKED BY	J. TAX, P.E.
PROJ. ENGR.	D. MCKERNAN, P.E.
REGIONAL ADM.	S. ROARK, P.E.

REVISION | DATE | BY

REGION NO. 10 | STATE WASH | FED.AID PROJ.NO.

JOB NUMBER 22C501

CONTRACT NO.

LOCATION NO. XL6517

P.E. STAMP BOX DATE

P.E. STAMP BOX DATE

Washington State Department of Transportation

SR112
CLALLAM BAY
EMERGENCY REPAIRS

TRAFFIC CONTROL PLAN

Plot 4

PLAN REF NO TCP1

SHEET 7 OF 7 SHEETS

7-07 Cleaning Existing Drainage Structures

7-07.1 Description

This Work consists of cleaning, removing, and disposing of all debris and obstructions from existing culvert pipes, storm sewer pipes, drains, inlet Structures, manholes, box culverts, grates, trash racks, or other drainage features within the limits of the project.

7-07.2 Vacant

7-07.3 Construction Requirements

All pipes and drainage Structures that require cleaning are identified in the Plans. They shall be cleaned by flushing, rodding, or whatever means are necessary to provide unobstructed drainage. All catch basin sumps, manholes, inlet and outlet Structures, and debris racks shall also be freed of all dirt, rock, and debris. Existing drainage facilities shall be cleaned as a first order of Work to enhance natural drainage off and through the project. They shall be kept clean throughout the life of the project and be clean upon final acceptance of the Work.

Material to be removed shall be disposed of in the following manner:

1. Structures specifically noted in the Contract that are suspected to contain contaminated sediment shall be disposed of at a licensed disposal facility.
2. While performing the Work, if drainage water and/or soil appear oily, exhibit an unusual color or odor, or if staining or corrosion is observed, the Contractor shall stop work and immediately notify the Engineer. Additional work necessary in handling materials shall be in accordance with Section 1-04.4.
3. If sediment and water from structures does not meet the conditions described in 1 or 2 above, material may be placed in an upland area with no possibility of surface runoff to waters of the State, including wetlands.

While performing the Work, the Contractor shall implement all necessary best management practices and measures to meet the conditions of Section 1-07.5.

7-07.4 Vacant

7-07.5 Payment

Payment will be made for the following Bid item when it is included in the Proposal:

“Cleaning Existing Drainage Structure”, lump sum.

The lump sum Contract price for “Cleaning Existing Drainage Structure” shall be full pay for performing all Work as specified. In the event the Contract does not include a Bid item for cleaning existing drainage Structure, such Work, if required, shall be performed by the Contractor in accordance with Section 1-04.4.

9-05.17(1) Continuous Lock Seam Pipe

Pipes fabricated with a continuous helical lock seam parallel to the rib may be used for full circle pipe. The lock seam shall be formed in the flat between ribs and shall conform to Sections 13.2.1 through 13.2.5 of AASHTO M196.

9-05.17(1)A Basis for Acceptance

The basis for acceptance will be a qualification test, conducted by the State Materials Laboratory, for each manufacturer of spiral rib lock seam pipe. Only those specific pipe sizes and gasket materials, if any, approved under the qualification test, will be accepted.

Continuous lock seam pipe shall be sampled and tested in accordance with AASHTO T 249.

9-05.17(2) Coupling Bands

Coupling bands shall be of the same material as the pipe. Coupling bands and gaskets shall conform to Section 9-05.10(1).

9-05.18 Safety Bars for Culvert Pipe

Steel pipe used as safety bars and steel pipe used as sockets shall conform to ASTM A53, Grade B. Steel tubing used as safety bars shall conform to ASTM A500, Grade B. Steel plate shall conform to ASTM A36. All parts shall be galvanized after fabrication in accordance with AASHTO M111.

9-05.19 Corrugated Polyethylene Culvert Pipe, Couplings, and Fittings

Corrugated polyethylene culvert pipe, couplings, and fittings shall meet the requirements of AASHTO M 294 Type S or D for pipe 12- to 60-inch diameter with silt-tight joints.

Corrugated polyethylene culvert pipe manufacturers shall participate in the National Transportation Product Evaluation Program (NTPEP) work plan for HDPE (High Density Polyethylene) Thermoplastic Pipe and be listed on the NTPEP audit website displaying they are NTPEP compliant.

Joints for corrugated polyethylene culvert pipe shall be made with either a bell/bell or bell and spigot coupling and shall incorporate the use of a gasket conforming to the requirements of ASTM D1056 Type 2 Class B Grade 3 or ASTM F477. All gaskets shall be factory installed on the coupling or on the pipe by the qualified manufacturer.

Qualification for each manufacturer of corrugated polyethylene culvert pipe requires an approved joint system and a formal quality control plan for each plant proposed for consideration.

A Manufacturer's Certificate of Compliance shall be required and shall accompany the materials delivered to the project. The certificate shall clearly identify production lots for all materials represented. The Contracting Agency may conduct verification tests of pipe stiffness or other properties as it deems appropriate.

9-13 Riprap, Quarry Spalls, Slope Protection, and Rock for Erosion and Scour Protection and Rock Walls

9-13.1 Riprap and Quarry Spalls

9-13.1(1) General

Riprap and quarry spalls shall consist of broken stone or broken concrete rubble and shall be free of rock fines, soil, or other extraneous material. Concrete rubble shall not be contaminated by foreign materials such as fibers, wood, steel, asphalt, sealant, soil, plastic and other contaminants or deleterious material. Concrete rubble that is imported to the job site will require testing and certification for toxicity characteristics per Section 9-03.21(1).

The grading of the riprap shall be determined by the Engineer by visual inspection of the load before it is dumped into place, or, if so ordered by the Engineer, by dumping individual loads on a flat surface and sorting and measuring the individual rocks contained in the load. Should the riprap contain insufficient spalls, as defined in Section 9-13.1(5), the Contractor shall furnish and place supplementary spall material.

Riprap and quarry spalls shall be free from segregation, seams, cracks, and other defects tending to destroy its resistance to weather and shall meet the following test requirements:

Aggregate Property	Test method	Requirement
Degradation Factor	WSDOT Test Method T 113	15 minimum
Los Angeles Wear, 500 Rev.	AASHTO T 96	50% maximum
Specific Gravity, SSD	AASHTO T 85	2.55 minimum

9-13.1(2) Heavy Loose Riprap

Heavy loose riprap shall meet the following requirements for grading:

	Minimum Size	Maximum Size
30% to 90%	1 ton (½ cu. yd.)	N/A
60% to 90%	300 lbs. (2 cu. ft.)	1 ton (½ cu. yd.)
10% to 30%	3 inch	50 lbs. (spalls)

9-13.1(3) Light Loose Riprap

Light loose riprap shall meet the following requirements for grading:

	Size Range	Maximum Size
20% to 90%	300 lbs. to 1 ton (2 cu. ft. to ½ cu. yd.)	N/A
15% to 80%	50 lbs. to 1 ton (⅓ cu. ft. to ½ cu. yd.)	300 lbs. to 1 ton (2 cu. ft. to ½ cu. yd.)
10% to 20%	3 inch	50 lbs. (spalls)

9-13.1(4) Hand Placed Riprap

Hand placed riprap shall be as nearly rectangular as possible, 60 percent shall have a volume of not less than 1 cubic foot. No stone shall be used which is less than 6 inches thick, nor which does not extend through the wall.

9-13.1(5) Quarry Spalls

Quarry spalls shall meet the following requirements for grading:

Sieve Size	Percent Passing
8″	100
3″	40 max.
¾″	10 max.

9-13.2 Vacant

9-13.3 Vacant

9-13.4 Rock for Erosion and Scour Protection

Rock for Erosion and Scour Protection shall be hard, sound, and durable material, free from seams, cracks, and other defects that tend to destroy its resistance to weather, and it shall consist of broken and/or processed rock. Rock for Erosion and Scour Protection shall meet the quality requirements in Section 9-13 and the grading requirements in Section 9-13.4(2). The use of recycled materials and concrete rubble is not permitted for this application.

9-13.4(1) Suitable Shape of Rock for Erosion and Scour Protection

The Suitable Shape of these rocks shall be “Angular” (having sharply defined edges) to “Subangular” (having a shape in between Rounded and Angular) for a higher degree of interlocking to provide stability to the protected area. The use of round, thin, flat, or long and needle-like shapes is not allowed. Suitable Shape can be determined by the ratio of the Length/Thickness, where the Length is the longest axis, Width is the second longest axis, and Thickness is the shortest. The Suitable Shape shall be the maximum of 3.0 using the following calculation:

$$= \leq 3.0 \text{ Suitable Shape}$$

9-13.4(2) Grading Requirements of Rock for Erosion and Scour Protection

Rock for Erosion and Scour Protection will be classified as Class A, Class B, and Class C, and it shall have a “Well-Graded” structure that meets the requirements for Suitable Shape and conforms to one or more of the following gradings as shown in the Plans.

DRAWN BY: FERN LIDDELL

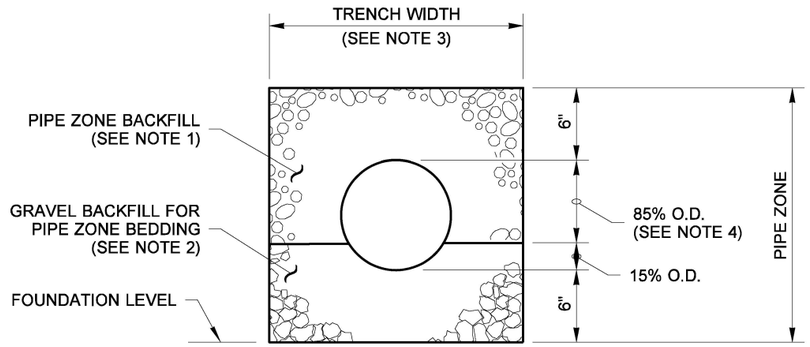

CONCRETE AND DUCTILE IRON PIPE

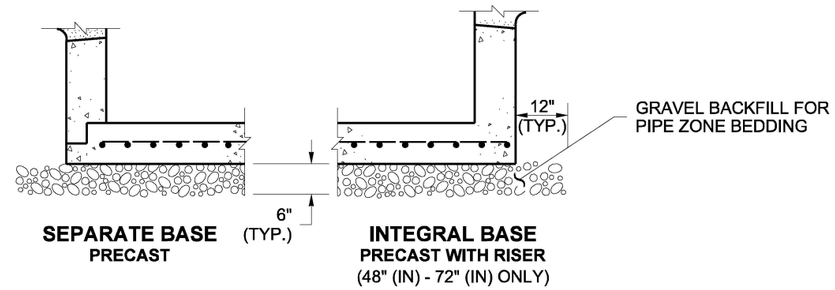

TYPICAL CONDITION FOR DRAINAGE STRUCTURE

THIS DETAIL APPLIES TO **STANDARD PLANS B-5.20, B-5.40, B-5.60, B-10.20, B-10-40, B-15.20,B-15.40, B-15.60, B-25.20, B-25.60, B-35.20** AND **B-35.40.**

NOTES

1. See **Standard Specifications Section 7-08.3(3)** for Pipe Zone Backfill.
2. See **Standard Specifications Section 9-03.12(3)** for Gravel Backfill for Pipe Zone Bedding.
3. See **Standard Specifications Section 2-09.4** for Measurement of Trench Width.
4. For sanitary sewer installation, concrete pipe shall be imbedded to spring line.

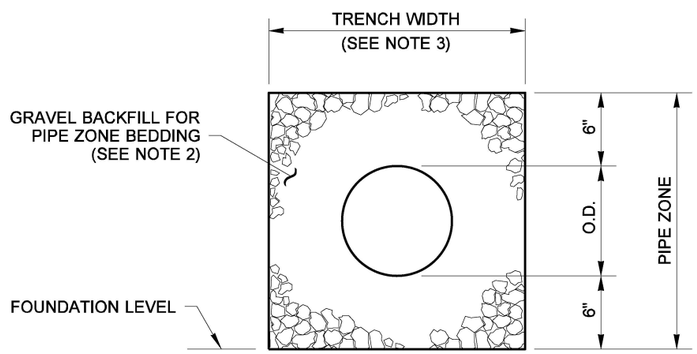

THERMOPLASTIC PIPE

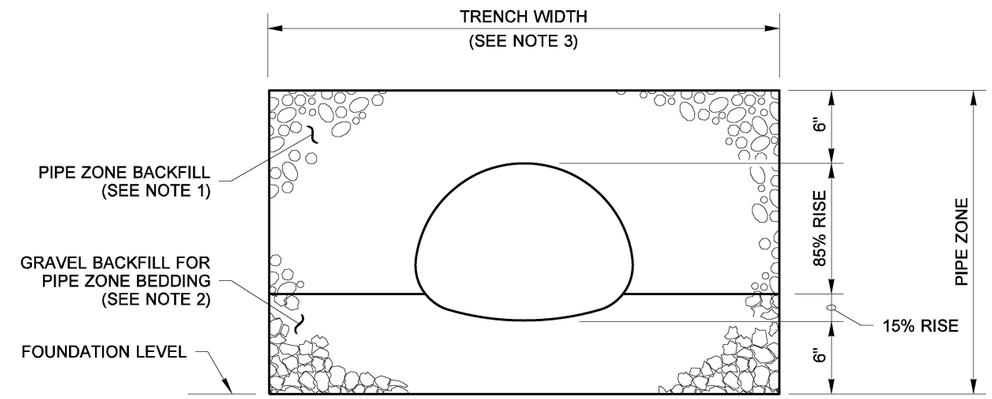

PIPE ARCHES

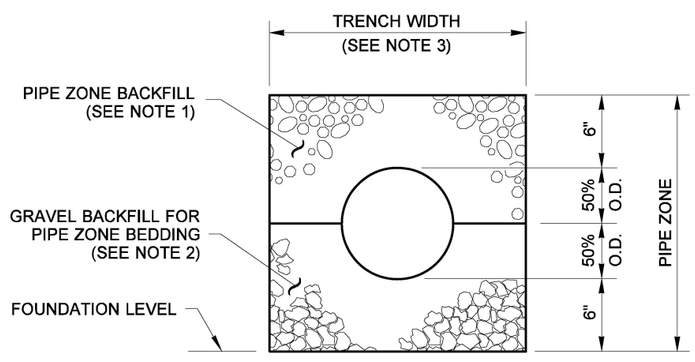

METAL AND STEEL RIB REINFORCED POLYETHYLENE PIPE

CLEARANCE BETWEEN PIPES FOR MULTIPLE INSTALLATIONS		
PIPE	**SIZE**	**MINIMUM DISTANCE BETWEEN BARRELS**
CIRCULAR PIPE (DIAMETER)	**UP TO 48"**	**24"**
METAL PIPE ARCH (SPAN)	**48" AND LARGER**	**DIAMETER/2 OR 36" WHICHEVER IS LESS**

Aug 17, 2021

PIPE ZONE BEDDING AND BACKFILL

STANDARD PLAN B-55.20-03

SHEET 1 OF 1 SHEET

APPROVED FOR PUBLICATION

Aug 17, 2021

STATE DESIGN ENGINEER

Washington State Department of Transportation

Contract Provisions

009766

For Construction of:

SR 112 MP 14.59 TO MP 17.17

CLALLAM BAY EMERGENCY REPAIR

CLALLAM COUNTY

A FEDERAL AID PROJECT

Washington State Department of Transportation

Washington State
Department of Transportation
Olympia, Washington 98504

SR 112
CLALLAM BAY
EMERGENCY REPAIR
22C501
CLALLAM COUNTY

Notice to All Planholders

The Engineer assigned to answer questions regarding these bid documents, show this project to prospective bidders, and act as the Contracting Agency's representative who directly supervises the engineering and administration of this project is:

Daniel D. McKernan
1707 South C Street
Port Angeles, WA 98363-7456
Phone: (360) 565-0620
Email: MckernD@wsdot.wa.gov

Steve Roark, P.E.
Olympic Region Administrator

As the Engineer in direct responsible charge of developing these contract provisions, I certify these provisions have been developed or incorporated into this project under my supervision or as a result of certified specifications provided by other licensed professionals.

Digitally signed by Dan McKernan
Date: 2022.01.12 08:40:58-08'00'