ROBINSON NOBLE

TECHNICAL MEMORANDUM 1

RN File No. 1174-007A

DATE: February 7, 2022
TO: Mr. Jon Miner, Murraysmith
FROM: Rick B. Powell, PE
RE: Clallam Bay Sekiu Water Main Evaluation after Landslide

1 INTRODUCTION

This memorandum summarizes our geotechnical engineering evaluation for the Clallam County Public Utility District water main between Clallam Bay and Sekiu, Washington. The study area for this memorandum is located between HWY-112 MP 15.79 to MP 16.4. A large landslide occurred in the area of Mile Post (MP) 15.79 to MP 15.90, blocking the State highway. Washington State Department of Transportation (WSDOT) is in the process of retaining a contractor to help stabilize the slide and re-open the roadway. We understand that the water line extending through the slide areas has been damaged. The damage was indicated by a recorded water loss in the system. There was also a small roadway embankment failure at MP 16.32 to MP 16.34. The roadway embankment will be repaired by WSDOT.

1.1 Scope

We have been retained by Clallam County Public Utility District to evaluate the existing conditions and provide our geotechnical comments. Our scope of services included:

- Review our previous Geotechnical Report finalized on September 13, 2021, before the landslides occurred.
- Complete a site visit with District Staff and Murraysmith to observe the slide area and conditions that may impact routing/installing a new water main in WSDOT right-of-way.
- During the site visit, conduct external visual inspection of HWY-112 culvert crossings with a specific focus on erosion and undermining of the culverts that could lead to stability concerns. Document and discuss conditions in a memo.
- Review geotechnical information from WSDOT related to the landslides or collected post-landslide occurrence.
- Evaluate and give an opinion on the potential for future slides along HWY-112 between Clallam Bay and Sekiu based on available geotechnical data. Make recommendations, if warranted, for additional geotechnical investigations/borings that would be prudent to inform final decisions on where to route water main piping.
- Prepare a brief memo discussing opinions of feasibility for routing a new permanent water main in WSDOT right-of-way, including preliminary assessments of the pros and cons of possible construction techniques and routing locations from a geotechnical perspective. Construction techniques to be considered include horizontal directional drilling (HDD) at a minimum.
- Water main alignments to be considered are within or near the WSDOT HWY-112 corridor.
- Conduct virtual meeting to discuss geotechnical observations and opinions.

DRAFT

1.2 Document Research

1. We have previously prepared a geotechnical report titled "Clallam Bay Sekiu Water Main Upgrades", dated September 13, 2021, included in Appendix A of this memorandum. This document describes the landslide deposits and landslide potentials that could affect the water line. We would like to emphasize a few key points from the report.

- The water line was constructed in 1963 and is composed of Asbestos Cement (AC) pipe, as explained in Section 1.1 of the Geotechnical Report.
- Mass-wasting deposits are described in Section 2.1. Mass wasting deposits are known to be material derived from landslides. Mass wasting deposits were encountered within both of our two borings and we expect it to be underlying a large portion of the roadway area.
- In the area of the main slide, which is approximately MP 15.84, the eastbound lane of HWY-112 appeared to be bulging upwards and grinding of the pavement to level the drive isle downwards had recently occurred, as described in the geotechnical report. The uplift was occurring most likely from the upward rotation of the toe of the landslide mass or compression of the roadway surface soils. See Section 2.4, third paragraph of the geotechnical report.
- Potential pavement bulging was also observed and documented in the geotechnical report for the area of the MP 16.36 eastbound lane of HWY-112. This potential bulging was identified as a typical super elevated banking observed in this lane.
- A water main bypass has been constructed in the main slide runout area and is above grade and uphill to the south of HWY-112. We understand the bypass was placed there due to the regular maintenance efforts because of leaking of the pipe within the roadway. See Section 2.4, third paragraph.
- We reference "large" historic landslide areas in the second paragraph of Section 3.1.
- We note that B-1 is referenced in the report near MP 16.0. This is mislabeled and is approximately near MP 15.84 and in the middle of main slide runout area.

2. Preliminary civil design plans show the location of the existing water main in the area between MP 15.79 and 16.40. From MP 15.79 to MP 16.1 the main extends down the south side of the highway. From MP 16.1 to MP 16.4 the mainline extends down the north side of the highway.

3. WSDOT boring log DP-1-21 located at MP 16.33. The boring encountered very loose soils extending down to 12 feet underlain by 5 feet of stiff to very stiff lean clay. The boring log is included in Appendix B.

4. Reviewed drone footage of the slide area.
https://www.youtube.com/watch?v=4esmmgxVPgM

5. Reviewed drone footage of the slide area.
https://www.youtube.com/watch?v=R0PhA0HEIKc

6. Emergency Slide Repair Plans
Plans have been prepared by WSDOT consisting of VM1, SQ1, SQ2, RS1, RS2, SR1, TCP1 and Contract Provisions – 009766. The plan sheets are included in Appendix B with this

DRAFT

memorandum. The intent of the construction is to remove the slide debris off the hillside and expose the underlying bedrock. WSDOT intends to remove debris from the top to the bottom of the slide and eventually clear the debris off the roadway. The slide debris is estimated to be 40,000 cubic yards of material.

We would like to point out a few items from the WSDOT plans and specifications:

Debris Slide – MP 15.79 to MP 15.90

- The main slide area is shown in the plan sheet RS1 and shows the debris in the area of MP 15.79 to MP 15.90.
- Roadway excavation, crushed rock replacement and asphalt limits are approximately MP 15.80 to MP 15.85 (about 250 feet).
- Three HDPE pipes are planned to be constructed as culverts and cross perpendicularly under the roadway. Two 12-inch diameter and one 18-inch diameter pipes are shown on RS1. The details of the pipe are in RS1 – Detail A.
- No document in the specifications for reinforcement of the roadway in the area of MP 15.79 and MP 15.90. Does not appear stabilization of the roadway is planned.
- An earthen berm, as shown on RS1, will be built uphill of HWY-112. The berm is intended to be at least 6 feet high and divert surface water and/or slide debris to the drainage channel upslope of HWY-112.

Deep Patch Repair – MP 16.34 to MP 16.36 (Plans conflict - it could be MP 16.32 to MP 16.34)

- The north embankment will be repaired as stated in the project specifications. They have entitled this "Geosynthetic Reinforced Deep Patch with Turf Reinforcement Mat" (Starts on Line 10, page 24 of contract specifications).
- At MP 16.33 - Reinforced slope will be at least 7 feet tall. Reinforcement layers will be 1 foot for the upper 6 feet. The reinforcement will be 2,000 pounds/foot design strength. The deep patch section is shown on RS2 and will be between MP 16.32 and MP 16.34 (~100 feet). **Note the plans indicate "Existing 10-inch Dia. Asbestos Conc. Water Main (Abandoned).** We understand this section of pipe is still active. No discussion of a new line or large oversized pipe. We note that the plans do not require the new deep patch to extend through the loose underlying soil.

2 SITE CONDITIONS

2.1 Surface Conditions

Our study has focused on the portion of the water main replacement project between MP 15.79 to approximately MP 16.4. We visited the site on January 18, 2022 to observe the existing conditions of the site. We observed the following conditions:

DRAFT

MP15.79 to MP15.90

Slide debris is currently covering the roadway. We observed the fog line within existing exposed sections of the asphalt pavement. The subsurface soil directly below the north edge of the pavement appears to have remained undisturbed and in the pre-slide condition. The slide debris and storm water appear to have flowed over the roadway and onto the beach area. The bypass line could not be located because of the amount of debris. We highly expect that the bypass line that was on the surface of the slope south and uphill of the roadway has moved north with the vast amount of slide debris. This would result in the water line breaking; however, visual confirmation that this has occurred is unable to be completed at this time.

Photo 1 – Slide Debris

Surface water and slide debris appears to have flowed over the surface of the pavement section and scoured the north side of the roadway embankment as seen in Photo 2. Current plans from WSDOT do not have a design concept to stabilize the north side of the roadway at this time. There are several drainage paths with this type of scour in the slide area.

Photo 2 – Approximate MP 15.84 – Exposed Pavement is near the roadway fog line.

DRAFT

MP 16.32 to MP 16.34

We observed the following as shown in Photo 3 and 4 in the area of the culvert. We have provided our photos from April 12, 2021 and January 19, 2022 for comparison.

Photo 3 – Culvert April 12, 2021

Photo 4 – Culvert January 19, 2022

It appears to us that this was caused more from an erosion of the soil than landslide mass moving. The extension of corrugated pipe at the end of the concrete pipe appears to be completely eroded away and not functioning. Water flowing through the roadway subgrade (also known as piping) may have occurred but no seepage was observed at the time of our visit. We also note that many layers of asphalt have been placed on the north side of the roadway. We understand that the asphalt thickness could range up to 18 to 24 inches in areas above the water main. The thickness of the asphalt appears to be an indicator that the roadway has settled and will continue to settle because of the loose underlying soils.

As identified in Photo 4, the AC water main has been exposed and is currently in operation. We did not observe any noticeable signs of leakage in the AC water main.

We did not observe any seepage of water around the outside of the culvert.

MP 16.0 Culvert

We reevaluated the culvert at MP 16.0 as referenced in our geotechnical report. It is possible that some water may be migrating through the bedding of the culvert, but it is difficult to confirm this. The 24 inch corrugated pipe is extremely eroded and the bottom of the pipe where the water is flowing over may have erosion holes near the north end of the pipe. It appears the water is seeping through the holes and making it appear that piping around the culvert is occurring. The culvert alignment is above and crosses over the AC water main; therefore, immediate impact of piping is not expected to affect the water line. However, the culvert is marginally functioning and should be repaired or improved.

DRAFT

Other Culverts
As requested we performed site observations of three other culverts in the area that allow water to discharge from the south side of the roadway and outlet on the north embankment. We did not observe any indications of piping or erosion around the outside of the culverts. We also note that all these culverts are at an elevation higher than the water main and therefore potential piping around the culverts would be higher in elevation than the existing water system.

3 OPINIONS AND CONCLUSIONS

3.1 Summary of MP 15.79 to MP 15.90

It is our opinion that the existing water line is still functioning in its current state except for the portion around MP 15.84. We highly expect that the bypass line that was routed above the ground and on the uphill slope south of the existing roadway has been damaged. Currently, we expect that this may be the only place where a leak occurred although it is too early to confirm this. Specific inspection and evaluation of the water line will need to be completed after the slide debris is removed. It is our opinion the bypass line should be abandoned and the original pipe water main repaired.

Currently, the plans and specifications from WSDOT are only planning to improve the upper portion of the roadway subgrade and asphalt section. They are not planning to excavate out the unstable loose soil below the roadway, as encountered in B-1 of our geotechnical boring.

The old landslide debris is what the roadway was built on and the AC water main extends through this material. There will be inherent risk of continued movement or at least creeping of the slide debris. This is also the area where several maintenance issues have occurred thus creating the reason for trying the bypass line. In other words, it has been a problem area and will continue to be an issue for the AC water main because it extends through the landslide debris within the roadway embankment.

It is possible that repairs to the water line in this area after the slide debris is removed may be enough to allow the water line to be placed in operation. Since the WSDOT plans are very basic, this will depend on how WSDOT cleans the slide debris and improves the conditions. What WSDOT eventually completes will have a significant impact on the future performance of the roadway embankment and also Clallam County PUD's system, if it remains within the roadway. The current plans do not show WSDOT improving the roadway embankment and they currently do not plan to remove the unstable landslide debris below the existing roadway. We also do not know if they will improve the rotational slide that has been uplifting the roadway in this area. We expect that the slide rotation affecting the roadway surface was likely the reason the water line kept having issues in this area.

3.2 Summary of MP 16.32 to MP 16.34

It is our opinion that the planned roadway stabilization improvement with reinforcement will not be deep enough to extend through the existing loose soils and landslide mass. The water line will still be at a similar risk level as the current conditions after WSDOT has completed their repair. We also expect that the area of repair does not adequately address the entire extent of

DRAFT

the roadway where pavement distress is occurring. WSDOT's concept of adding more asphalt appears to be the standard for this area. PUD representatives have indicated that many areas of the north side of the roadway have significant thicknesses of asphalt.

3.3 Summary – General Comments

It should be understood that this entire study area is highly susceptible to landslides and/or settlement. Observations of the uneven roadway surface, pavement cracks and the large amount of asphalt overlays should be a good indication that the roadway surface has been in distress for many years. The water line is within the roadway prism and extends through historic landslide areas. Landslides have been occurring in this area for thousands of years and will **continue** to occur based on the observed weak soil conditions, slope angles, and the high amount of rainfall in the area. Creating an engineered stable condition of the roadway for the entire alignment would likely be cost prohibitive. Even with these risks, the water line has been in service for almost 60 years; however we are not aware of the frequency of the repairs to this section of the water main system.

We are of the opinion that if the water line is left or replaced with a new one in the roadway that the importance factor of it should be lowered. This could be done by routing the water around the slide complex or installing a well(s) on both sides of this slide area.

4 Possible Options

4.1 Repair the bypass line

It is very possible that the AC water line could be repaired after the slide debris is removed from the roadway. We strongly encourage not replacing the bypass line. Since the roadway does not appear to have moved, it would be best to create a more flexible system with restrained-joint pipes, HDPE pipe or an outer protective casing where maintenance issues have occurred. The improvements that WSDOT plans to make could help stabilize things in the short term although the details of their plans are very limited. It will be important to understand if they reduced the potential uplift on or compression of the roadway from the slide movement, since this will be critical to the longevity of any type of pipe installed in or near the roadway. Also, installation of a large casing around the water line would provide more flexibility in the system from sharp moves or bends thus reducing the risk of maintenance repairs.

Pros:

- Likely the most timely and less expensive option.
- Performance of the water line will likely be similar to what has occurred in the past.
- Improvement could be made to the areas where greater maintenance has occurred.

Cons

- The existing inherent risk of potential movement of the loose subsurface condition under the roadway will remain present.
- Continued maintenance repairs could be required.
- Not a good long term solution. As the demand for water increases, the water line will be more heavily relied on to transport water.

DRAFT

- Large landslides or roadway embankment movement could cause the pipe to leak or completely break.

Additional Study

- At this time it is too early to determine if additional study is needed. The slide debris will need to be removed and the water main line will need to be assessed for damages.

4.2 Horizontal Direction Drilling (HDD) techniques

We discuss on page 20 of our geotechnical report that directional drilling techniques may prove difficult. HDD would have to occur at more stable areas and then extend deep enough to be below the historic landslide debris. The construction constraints could be the depth of the bedrock outcrops. Based on our borings and observations from the hillside, they could exist at depths causing the installation to be cost prohibitive, if it is even possible. HDD could be considered in small localized areas just to get under the highly problematic areas or it could be considered under the bay for longer runs and completely bypass this area. Unfortunately, there is not enough available information to see if these options are even feasible at this time.

4.2.1 HDD in the Roadway alignment but extending under potential slide surfaces

One option would be to complete HDD lines in only those smaller areas where increased maintenance has occurred. The HDD lines would be in similar alignment to the existing water main but extend deeper into the subsurface conditions. We are roughly estimating 10 to 20 feet below the existing landslide debris; therefore, the pipe would be a total of 30 to 40 feet deep. A large HDD casing would be installed and then a water pipe would be routed inside the large casing. This larger casing would provide additional flexibility in the system to allow for some movement.

Pros:

- Can be designed to extend below the unstable existing or historic landslide mass and within the underlying stable soil.
- Provides a more long term solution to the water line system in this area.
- Eliminates open trenches within the roadway which we understand are not allowed within HWY-112.

Cons

- Bedrock may be encountered at the planned pipe depth depending on the planned locations.
- Increased engineering and construction cost – depending on the length of the planned section(s).
- We expect the HDD lines would need to extend at least 30 to 40 feet below the roadway surface in the area of our B-1 and B-2. This would be about 10 to 20 feet below the landslide mass. It may be only 20 feet deep in the area of DP-1-21.
- Any future access or repair efforts to the deep water line alignment would be difficult or impracticable. A new main alignment may be required if future repair efforts of the deep alignment are needed.

DRAFT

Additional Study

- There is nearly no current subsurface data in the area that is available to be studied except for our B-1, B-2 and DP-1-21.
- Depending on the length of the HDD line, several geotechnical borings would be required. We would also recommend geophysics in attempt to identify bedrock outcrops.

4.2.2 HDD crossing the Bay

Another option would be to complete HDD lines through the bay and bypass the historic landslide area. Additional review would have to occur to evaluate the feasible length of HDD pipe. Construction of an HDD line in the bay could allow for elimination of the larger casing and therefore, installing only the HDPE water line.

Pros:

- Can be designed outside of the historic landslide mass
- Provides a more long-term solution to the water line system in this area.
- Eliminates open trenches within the roadway which we understand are not allowed within HWY-112.

Cons

- Bedrock may be encountered at the planned pipe depth depending on the planned locations.
- High cost for geotechnical study to determine the subsurface conditions in the area of one or more pipe alignments.
- Total cost – depending on the length of the planned section(s) the cost can be significant. Greater lengths of HDD line can be very expensive.
- Any future access or repair efforts to the deep water line alignment would be difficult or impracticable. A new main alignment may be required if future repair efforts of the deep alignment are needed.

Additional Study

- There is nearly no current subsurface data in the area that is available to be studied.
- Depending on the length of the HDD line, several geotechnical borings would be required.

4.3 Abandonment of the line through the slide area

This option should be considered. It may be more feasible to extend the water line around the historic slide or drill a new well on both sides of the slide.

Pros:

- The subject landslide would not impact the system in our study area.

DRAFT

Cons

- Loss of the existing water main line.
- Other potential landslide hazard areas would need to be evaluated within an alternative alignment.
- High cost of constructing a new water well.

5 USE OF THIS MEMORANDUM

We have prepared this report for Murraysmith, Clallam County PUD and their agents, for use in planning and design of this project.

Within the limitations of scope, schedule and budget for our services, we have strived to take care that our services have been completed in accordance with generally accepted practices followed in this area at the time this report was prepared. No other conditions, expressed or implied, should be understood.

We appreciate the opportunity to be of service to you. If there are any questions concerning this report or if we can provide additional services, please call.

Appendix A and B

DRAFT

Appendix A

- Robinson Noble Geotechnical Report - September 13, 2021

Geotechnical Report

Clallam Bay Sekiu Water Main Upgrades

Clallam Bay/Sekiu, Washington

Prepared for:

Mr. Jon Miner, PE

RN File No. 1174-007A • September 13, 2021

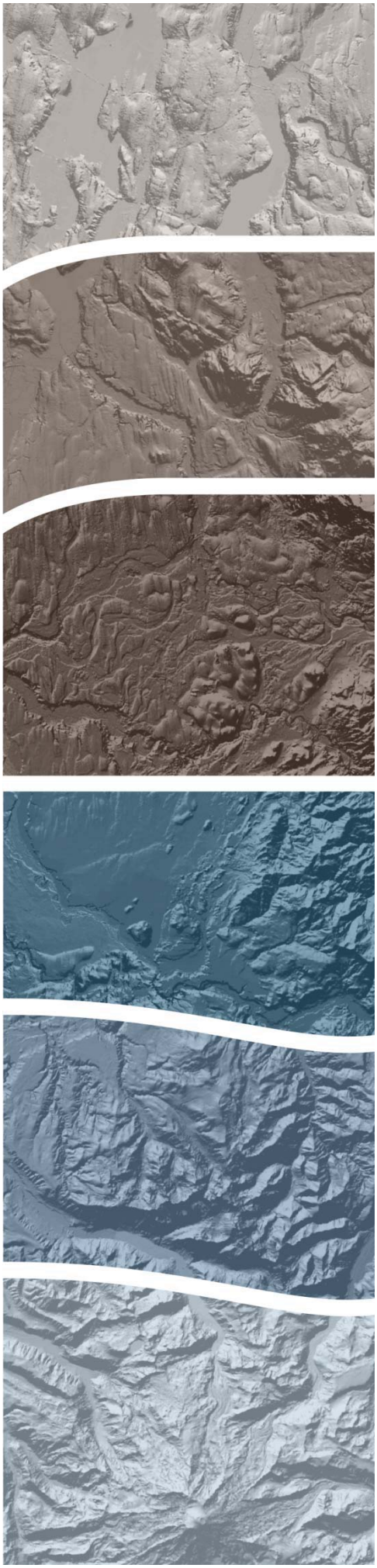

ROBINSON NOBLE

Geotechnical Report

Clallam Bay Sekiu Water Main Upgrades

Clallam Bay/Sekiu, Washington

RN File No. 1174-007A • September 13, 2021

Prepared for:

Mr. Jon Miner, PE
Murraysmith
600 University Street, Suite 300
Seattle, Washington 98101

Robinson Noble, Inc.

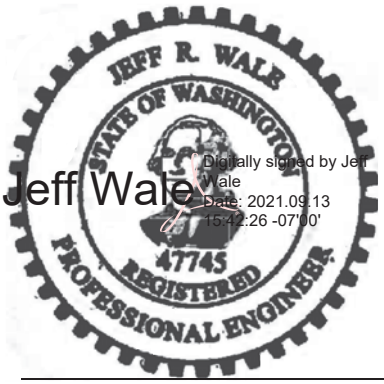

Jeff Wale
Digitally signed by Jeff Wale
Date: 2021.09.13 15:42:26 -07'00'

Jeff R. Wale, PE
Senior Engineer

JRW:RBP:am

ROBINSON NOBLE

2105 South C Street
Tacoma, Washington 98402
P: 253.475.7711 | F: 253.472.5846

www.robinson-noble.com

17625 130th Avenue NE, Suite 102
Woodinville, Washington 98072
P: 425.488.0599 | F: 425.488.2330

TABLE OF CONTENTS

1 INTRODUCTION 1

1.1 Project Description 1
1.2 Scope 1

2 SITE CONDITIONS 2

2.1 Geologic Setting 2
2.2 Seismic Setting 3
2.3 Critical Areas Designations 4
2.4 Surface Conditions 5
2.5 Field Explorations 6
2.6 Laboratory Testing 6
2.7 Subsurface Conditions 6
2.7.1 Stratigraphy/Soil Conditions 6
2.7.2 Hydrologic Conditions 8

3 CONCLUSIONS AND RECOMMENDATIONS 8

3.1 Summary of Geotechnical Considerations 8
3.2 Seismic Engineering 9
3.2.1 Seismic Hazards 9
3.3 Slope Stability 10
3.3.1 Landslide Hazard 10
3.4 Earthwork and Construction Considerations 13
3.4.1 Temporary Cuts 13
3.4.2 Structural Fill 14
3.4.1 Water Main Utilities 14
3.4.2 Dewatering 17
3.4.3 Wet Weather Considerations 18

4 FUTURE WORK 18

4.1 Engineering and Design 18
4.2 Construction Observation 18

5 USE OF THIS REPORT 18

6 REFERENCES 19

List of Figures

Post-text Figures

Figure 1.	Vicinity Map
Figure 2.	Site Plan
Figure 3.	Unified Soil Classification System
Figure 4 and 5.	Boring Logs – Boring 1
Figure 6 and 7.	Boring Logs – Boring 2
Figure 8 thru 10.	Test Pit Logs

Cover sheet graphic shows western Washington geomorphology as a hillshade from Mount Rainier to the Seattle metropolitan area. Image is derived from a compilation of Washington State DNR LIDAR surveys obtained from the Washington Lidar Portal: http://lidarportal.dnr.wa.gov/

1 INTRODUCTION

This report presents the results of our geotechnical engineering investigation for the Clallam Bay Public Utility District proposed water main upgrades between Clallam Bay and Sekiu, Clallam County, Washington. The project areas are located between and including Clallam Bay and Sekiu, Washington, as shown on the Vicinity Map in Figure 1. We understand project plans are to upgrade existing water mains within the project alignments due to their age and because of slope movement in the area that has caused failures requiring ongoing repair efforts.

1.1 Project Description

The Clallam Bay/Sekiu water system was constructed in 1963 and is now beyond the life expectancy of the system. The existing water main is composed of Asbestos Cement pipe. We understand that some of the failures observed in the existing water main are associated with the age and deterioration of the pipes.

Portions of the pipe system also extend through areas of ongoing slope movement. The combination of the age of the system and ongoing slope movement has led to frequent repair efforts, including areas where repair efforts are difficult to perform. Clallam PUD is planning to update the existing water main within portions of Sekiu and Clallam Bay and State Route (SR) 112 connecting the two systems.

Alternative water main installation methods are being considered for the project. These methods include open trench installation, directional drilling and pipe bursting. Restrained joint pipes are also being considered in areas of slope movement.

You have requested that we complete this geotechnical report to document and evaluate existing conditions at the site and to provide recommendations for geotechnical design elements of the proposed project.

1.2 Scope

Our scope of services included:

Phase 1 – Investigation Plan

- Review available geologic maps and existing geotechnical reports for the area, if available.
- Review available online or prepared topographic information within the project area of concern.
- Provide our opinion of needed locations, exploration method and anticipated depth of explorations in a Technical Memorandum.

Phase 2 – Field Investigations

- Explore the subsurface soil and groundwater conditions in the area of the planned water main alignment. Backhoe excavated test pits or drilled borings will be determined and performed based on local geology and topographic surveys.
- Prepare and provide test pit or boring logs based on the observed subsurface geology during the exploration procedures.

Phase 3 – Geotechnical Report

- Prepare a geotechnical report containing the results of our subsurface explorations, and our conclusions and recommendations for geotechnical design elements of the project.

We completed these services in general accordance with the Task Order, dated November 5, 2020. We received notice to proceed on November 30, 2020.

2 SITE CONDITIONS

2.1 Geologic Setting

Most of the northern extents of Washington State were affected by past intrusions of continental glaciation. Since the last period of glaciation, the Vashon Stade of the Fraser Glaciation, ending approximately 14,000 years ago, geomorphic features of the near surficial geology have resulted from glacial rebound, sediments placed by hydrologic forces and mass wasting events occurring from slope instability. Soils encountered above the elevations of the advancing and retreating glaciers typically expose bedrock conditions uplifted over millions of years of plate tectonics. Soil layers overridden by the ice sheet were compacted to a much greater extent than those that were not. Part of a typical geologic sequence within the area of the project includes the following soil deposits from newest to oldest:

Quaternary Mass-Wasting Deposits (Colluvium) (Qls) – These deposits are mostly derived from landslide deposits in the project area. Landslide deposits consist of loose, unsorted, and unstratified soils composed of the parent geologic material from which the slide derived.

Quaternary Alluvium (Qa) – Alluvium consists of loose, stratified to massively bedded fluvial silt, sand and gravel, typically well rounded and moderately to well sorted. Alluvium has been placed by water sources since the last glaciation period.

Vashon Till (Qgt) – The till is a non-sorted mixture of clay, sand, pebbles, cobbles and boulders, all in variable amounts. The till was deposited directly by the ice as it advanced over and eroded irregular surfaces of previously deposited formations and sediments. The till was well compacted by the advancing glacier and exhibits high strength and stability.

Tertiary Sedimentary Rocks and Deposits – The project area consist of Oligocene to Eocene epoch marine sedimentary rocks. These units are composed of sediments that were deposited prior to multiple glaciations in the area. The sedimentary rocks are generally composed of Makah Formations, Middle Twin River Groups and Pysht Formations.

The geologic units for this area are mapped on the Washington Geologic Information Portal online 1:100,000 scale Surface Geology Map. We have divided the project into four separate areas for simplicity that are identified as Sekiu, Western Highway (Hwy) 112, Eastern Hwy 112, and Clallam Bay.

Sekiu: The project area within Sekiu is composed of mass-wasting deposits, alluvium, and sedimentary rock. Mass-wasting deposits are mapped in the northern region of the project

area roughly west of Washington Street, east to Clallam Bay and approximately from Thompson Street south to Division Street. Alluvium soils are shown in the eastern region of Sekiu adjacent to Clallam Bay and generally west of Front Street. The remaining project area of Sekiu is mapped as sedimentary rock. Our explorations encountered artificial fill overlying mass-wasting deposits

Western SR 112: The project area within the western SR 112 alignment is generally mapped as sedimentary rock. Mass-wasting deposits are located in the eastern extent of the western SR 112 section. The mass-wasting deposits are observed approximately 300 feet west of Konopaski Heights Road and extend east approximately 1,500 feet. Explorations were not performed in this area.

Eastern SR 112: Sedimentary rock is mapped in the approximate western half of this section. Alluvium soils encompass the eastern approximate half of this section and extend to Clallam Bay. Mass-wasting deposits were observed in the central region of the alignment where the sedimentary rock abuts the alluvial soils, but geology maps indicate that the alluvial soils overlay the mass-wasting deposits adjacent to Clallam Bay. Two borings performed in this area encountered artificial fill overlying mass-wasting deposits overlying sedimentary rock.

Clallam Bay: The project area is generally composed of alluvium soils in the City of Clallam Bay, although the southwest region is composed on sedimentary rock. Within the project area, W Kellogg Road appears to be the only region extending into sedimentary rock. Explorations performed in Clallam Bay encountered artificial fill overlying alluvium fine grain silts in the northern region of Clallam Bay and fill overlying sedimentary rock on the southern region of Clallam Bay.

2.2 Seismic Setting

The Pacific Northwest is very seismically active. Off the coast, the Juan de Fuca Oceanic Plate collides into and descends (subducts) under the North American Continental Plate. The contact between these plates forms an approximately 600 mile long fault known as the Cascadia Subduction Zone (CSZ). The resulting stresses generate three unique types of earthquakes that contribute to seismic risk in the region (Cascadia Region Earthquake Workgroup, 2013):

Subduction (or Megathrust) Earthquakes: Megathrust earthquakes are formed by a rupture of the contact between the plates along the CSZ. These events are capable of generating a magnitude 9 or larger earthquake. These earthquakes are relatively far from the Puget Sound, but still pose great risk due to their extreme intensity and duration. Along the CSZ, megathrust earthquakes are understood to have a recurrence interval of roughly every 500 years. The last such event along the CSZ happened in 1700 AD, lowering the coastline several feet and generating a large tsunami across the Pacific Ocean.

Shallow (or Crustal) Earthquakes: Stress from the subduction zone fractures and deforms the continental crust across the Pacific Northwest. When these near-surface crustal faults break, they generate earthquakes that affect smaller areas, but can locally be more intense than the subduction events off the coast. Such faults happen to pass under some of the most populous areas in Washington State, including the greater Seattle and Tacoma areas. Because of their proximity and local intensity, these fault zones are often the greatest contributing factor to seismic risk in the Puget Sound.

Deep (or Intraslab) Earthquakes: Intraslab earthquakes are associated with fractures within the subducting Juan de Fuca plate. Because they occur at depths over 18 to 30 miles beneath the surface, the energy of these earthquakes is dissipated over large areas of ground surface, increasing their zone of influence but limiting their severity. However, these earthquakes are still capable of causing significant damage to structures and are the most frequent seismic events in the Puget Sound region. A magnitude 6.5 or larger earthquake affecting the region can be expected, on average, every 30 years. The 2001 Nisqually earthquake was an intraslab earthquake with over $4 billion in damages, 400 injuries, and one death. (Cascadia Region Earthquake Workgroup, 2008).

The site is mapped on the U.S. Quaternary Faults and Folds Database web application by the U.S. Geological Survey as located between several unnamed faults in the Strait of Juan de Fuca north of the project area and the Calawah fault located south of the project area. These faults generally trend in a northwest-southeast alignment. The database lists the Calawah Fault as a Class A fault, meaning there is evidence of fault displacement during the Quaternary Period and the fault is considered active. The unnamed faults located in the Strait of Juan de Fuca are considered Class B faults indicating there is a lack of formal evidence of fault displacement.

The nearest active seismic feature, within the Calawah fault, is a strand approximately 9 miles southwest of the project area. Strand locations are constrained by aeromagnetic studies and mapping of surface deformation visible in LIDAR mapping, as well as field explorations of past surface ruptures.

2.3 Critical Areas Designations

The Clallam County Multipurpose GIS map was reviewed for critical area designations within the site. Three designations with respect to geohazards were identified within the project areas. These hazards were identified as Erosion Hazards, Landslide Hazards and Seismic Hazards.

Sekiu – The Sekiu area improvements are encompassed by erosion hazards. The far western region of the improvements steps into an area of landslide hazards and generally encompasses the Washington Street improvements. The Front Street improvements and the eastern region of the laterals extending west from Front Street appear to be in an area of seismic hazards.

Western Hwy 112 – This area of the project encompasses regions of landslide, erosion and seismic hazards throughout the alignment. The erosion and landslide hazards appear to be associated with the project alignment and the steep slopes on the south side of the Hwy 112, while the seismic hazard appears to be associated with the project alignment and to the north.

Eastern Hwy 112 – This region of the site is mostly composed of landslide hazards in the area of the water main upgrades. Seismic hazards are mapped north of the central region of the main alignment and in the far east portion of this region.

Clallam Bay – Most of the project area in Clallam Bay appears to be free of ECA classifications with the exception of Frontier Street and SR 112 in the north region of the project area. This area is designated as a seismic hazard area.

2.4 Surface Conditions

The project is composed of about 2 miles of new water main alignment within Sekiu, SR 112 and Clallam Bay. The project areas are bordered by Clallam Bay to the north and east and the Olympic mountain range to the south. A layout of the site is shown on the Site Plan in Figures 2a through 2c.

The ground surface within the project areas range from flat to steeply sloping conditions. In the area of Clallam Bay slopes generally descend downward in a northeast direction. Along the SR 112 region of the project slopes descend in a north-northeast direction. Slopes generally descend eastward in the area of Sekiu and the city appears to be mostly developed in a large bowl-shaped feature.

Indications of slope movement were observed within the project areas. More specifically along the SR 112 alignment and within the City of Sekiu. Semi-circular pavement cracks were observed in the SR 112 alignment. These pavement cracks were more prevalent in the eastern half of the SR 112 alignment between Konopaski Heights Road and the City of Clallam Bay. Pavement cracks appeared to be more focused in the west-bound lanes of SR 112. Just east of Konopaski Heights Road (approximate Mile Post 16.0), the east-bound lane of SR 112 appeared to be bulging upwards and grinding of the pavement to level the drive isle downwards had recently occurred. A water main bypass exists in this area and is above grade on a slope on the south side of SR 112 due to regular maintenance efforts. Surficial observations in the area of the east-bound lane of Mile Post 16.36 along SR 112 also may be experiencing some uplift of the road section based on atypical superelevated banking observed.

We also observed, in the area of the failing pavement section at Mile Post 16.0, a creek crossing where water is being piped below grade through a corrugated, approximate 2 foot diameter, metal pipe (pictured). This metal pipe appeared to be failing and water appears to discharge below grade somewhere below the pipe alignment, causing erosion and voids below the pipe. Significant erosion appears to be occurring around the outfall of the storm pipe as well.

Figure A - MP 16.0 Failing Storm Pipe Crossing

Numerous pavement patches were observed in Rice Street in Sekiu where we understand multiple water main repair efforts have been made. We did not observe transverse or longitudinal pavement cracking. Other roadways within the Sekiu project area appeared to be performing adequately, but had been chip sealed and cracked pavement sections may have been covered. Outside the project area, we did observe considerable semi-circular pavement cracks within Washington Street west of Rice Street. Offset of several inches was observed in the pavement cracks. The circular cracking appeared to indicate slope movement to the east in the direction of Rice Street.

2.5 Field Explorations

We explored subsurface soil and groundwater conditions within the site on March 12, 2021, by drilling two borings with a truck mounted drill rig. The borings were drilled to depths of approximately 31 feet below the ground surface. The borings were sampled at 2.5-foot intervals to a depth of 10 feet depth and then at 5-foot intervals thereafter. Samples were obtained using the Standard Penetration Test. This test consists of driving a two-inch outside diameter split spoon sampler with a 140-pound hammer dropping 30 inches. The number of blows required for penetration of three 6-inch intervals was recorded. To determine the standard penetration number at that depth the number of blows required for the lower two intervals are summed. These numbers are then converted to a hammer energy transfer standard which is 60 percent, N_{60}. If the number of blows reached 50 before the sampler was driven through any 6-inch interval, the sampler was not driven further and the blow count is recorded as 50 for the actual penetration distance. The borings were located in the field by a representative from this firm who also examined the soils and geologic conditions encountered, and maintained logs of the borings.

We explored subsurface conditions at the site on May 11, 2021, by excavating five test pits with a mini-excavator operated by Clallam Bay PUD staff. The test pits were excavated to depths of approximately 5 to 8 feet below the ground surface.

The approximate locations of the borings and test pits are shown on the Site Plan in Figures 2a through 2c. The soils were visually classified in general accordance with the Unified Soil Classification System, a copy of which is presented as Figure 3. The logs of the explorations are presented in Figures 4 through 10.

2.6 Laboratory Testing

We completed moisture content testing on selected samples from our borings. The moisture contents are shown on the boring logs.

2.7 Subsurface Conditions

The subsurface conditions at the site are briefly described below, based upon our completed field explorations of soils, laboratory testing, and review of geologic maps available for the site. For a more detailed description of the soils encountered, review the Boring Logs in Figures 4 through 7 and Test Pit Logs in Figures 8 through 10.

2.7.1 Stratigraphy/Soil Conditions

Based on our completed borings, we interpret that the subsurface stratigraphy on site can be grouped into 4 soil units: loose to medium dense surficial soils interpreted as artificial fill **(af)**, loose/soft to medium dense/stiff soils with varying amounts of sands, silts and clays interpreted as landslide deposits **(Qls)**, medium stiff to stiff silts interpreted as alluvium, and hard silts interpreted as sedimentary rock. Stratigraphy is described below for Sekiu, Eastern SR 112 and Clallam Bay.

Sekiu – Test Pits 1 through 3 were performed within the City of Sekiu. The test pits were performed within the midpoints of west-east descending slopes within Washington Street, Commercial Street and Rice Street. The encountered fill and colluvium soils are described below.

Artificial Fill/Colluvium: Material indeterminate of colluvium (landslide debris) or artificial fill was encountered in all three test pits within the City of Sekiu. This material was observed below topsoil elevations to approximately 5 feet in Test Pit 1, 3 feet in Test Pit 2 and 6 feet in Test Pit 3. We anticipate significant grading occurred to create road sections within the city and the material could have been disturbed during these process or deeper sections of this zone may be associated with previous landslides within the project area. The encountered fill generally consists of medium stiff, moist, jumbled brown and gray silt with varying amounts of sand gravel, organics, and silt clasts.

Colluvium: Material interpreted to be colluvium was encountered in all three test pits with the City of Sekiu and was observed to the depths explored. This material was observed below the fill/colluvial soils to depths of approximately 6 feet in Test Pit 1, 6 feet in Test Pit 2 and 8 feet in Test Pit 3. The colluvial soils consisted of soft to stiff bluish gray silt with silt clasts in Test Pits 1 and 2 and existed of bluish gray clayey silt with silt clasts in Test Pit 3.

Western State Route 112 - Explorations were not performed in Western SR 112. Western SR 112 is geologically mapped as sedimentary rock and we did not observe indications of slope movement or settlement in this area. We expect some fill would exist due to grading activities to construct SR 112.

Eastern State Route 112 – Borings 1 and 2 were performed in the eastern region of State Route 112. Boring 1 was performed at approximate Mile Post 16.0 and Boring 2 was performed at approximate Mile Post 16.35. These borings were performed in two areas where pavement failures were occurring in the northern west-bound lanes of the highway. Eastern SR 112 encountered fill, colluvium and sedimentary rock.

Artificial Fill: Artificial fill was encountered in both borings within SR 112. This material was observed below pavement sections to approximately 7 feet in Borings 1 and 2. We anticipate significant grading occurred to create road sections along SR 112. The encountered fill contained varying soil content consisting of loose to medium dense, moist to wet, brown, black and gray silty sand with gravel and organics to manufactured crushed rock.

Colluvium: Material interpreted to be colluvium was encountered in both borings within SR 112. This material was observed below the fill soils at depths ranging from approximately 7 feet to depths of approximately 20 feet in both borings. The colluvial soils consisted of very loose/soft to medium dense/stiff, moist to wet, bluish gray to brown silty sand, silt and clay with silt clasts.

Sedimentary Rock: Material interpreted to be sedimentary rock was observed in both Borings 1 and 2 below the colluvium and was observed at depths of approximately 20 feet to the base of the borings at approximately 30 feet. The sedimentary rock consisted of hard silt in Boring 1 and hard sandy silt in Boring 2.

Clallam Bay – Test Pits 4 and 5 were excavated in Clallam Bay along the Bogachiel Street right-of-way. Clallam Bay explorations encountered fill, alluvium and sedimentary rock.

Artificial Fill: Artificial fill was encountered in Test Pits 4 and 5 within Bogachiel Street. This material was observed below pavement sections to approximately 5 feet in Test Pit 4 and 1 foot in Test Pit 5. We anticipate significant grading occurred to create road sections within Clallam Bay. The encountered fill contained varying soil content consisting of loose to medium

dense, moist to wet, brown, black and gray soils varying from silty sand, sandy silt and sand with gravel.

Alluvium: Alluvium was observed in Test Pit 4 and Test Pit 5 below the fill. The fill consisted of medium stiff to stiff, moist to wet, bluish gray silt in Test Pit 4. This material was observed from approximately 5 feet to the depths explored of approximately 6 feet. In Test Pit 5, the material consisted of medium stiff, moist, orangish brown silt with trace sand and gravel to approximately 4 feet.

Sedimentary Rock: Sedimentary rock was observed at the base of Test Pit 5 within Bogachiel Street. The material consisted of dense/stiff to very dense, moist, jumbled gray, brown and black silty sand to sandy silt with gravel and was observed from approximately 4 to 5 feet.

2.7.2 Hydrologic Conditions

We observed moderate to heavy shallow groundwater seepage while excavating Test Pit 4 at a depth of approximately 4.5 feet. This test pit was excavated adjacent to a low lying wetland area. The borings were performed using mud-rotary techniques which limit the ability to observe free standing water on the soil sampler, or measure water elevations within the completed boring prior to backfill. Groundwater elevations were therefore estimated based on moisture observed in the samples during sampling and laboratory moisture contents of the boring samples. Groundwater elevations were estimated to be approximately 6 feet in Boring 1 and 8 feet in Boring 2.

Based on the stratigraphy, we consider the encountered water to be perched over low permeable soils. Volumes of perched groundwater vary depending upon the time of year and the upslope recharge conditions. During the wetter times of the year, we expect perched water conditions will occur as water from upslope drains on top of low permeable soils. Perched water does not represent a regional groundwater "table" within the upper soil horizons.

3 CONCLUSIONS AND RECOMMENDATIONS

3.1 Summary of Geotechnical Considerations

It is our opinion that the site is compatible with the planned development although we suspect ongoing slope movement observed in portions of the project areas could lead to continued repair efforts through the life of the structures. We imagine that financial expenditures to reduce slope movement and subsequent pipe breakage in areas of current movement would not be feasible. The efforts to reduce slope movement would need additional explorations and slope repair efforts outside of Clallam PUD property, requiring permanent easements.

We have observed through review of online Clallam County GIS of two locations of historic landslides within the project area. Continued soil movement is occurring in these areas. Explorations in these areas indicated that landslide deposits exist to significant depths. The first area appears to encompass a majority of the City of Sekiu. The second area appears to encompass a majority of the eastern approximate half of the project alignment within SR 112. The locations are discussed further in the **Landslide Hazard** subsection of this report.

We understand through conversations with Clallam PUD staff that the observed pipe failures within Sekiu, and more specifically within Rice Street, appear to be failing in compression. We

suspect that driving forces from the slope above the pipe alignment is compressing the pipe and potentially causing the failures.

We understand the project may incorporate the use of restrained joint pipes for water main installation in areas of suspected ongoing ground movement. **The restrained joints would not stop the pipe movement in areas of slope movement.** The restrained joints may slow the initial repair efforts as the pipes would distribute horizontal stresses down the length of the pipe. As these stresses develop down the length of the pipe, multiple failures along the pipe alignment could occur. We suspect the failures would become more prevalent once the pipe has been deflected to its maximum allowable radiuses.

Pipe bursting and directional drilling techniques could be used for installation of the new water main. It is our opinion that these techniques may be more financially viable in locations where water mains bisect steep slopes, especially in locations of ongoing slope movement. Directional drilling could direct pipes below slope movement and reduce pipe failures. The best location for these procedures would exist in Sekiu where slope movement is occurring. Additional drilling explorations would be required to determine the failure plane depth of the slope movement. These techniques are discussed further in the **Water Main Utilities** subsection of this report.

We make special note of the failing storm pipe crossing located at approximate Mile Post 16.0 within SR 112 as shown in Figure A on Page 7**.** This pipe underlying the road section appears to be failing, as observed at the outfall location, and causing erosion under the pavement section. We also suspect that the failed pipe is saturating the below grade soils in the road prism. Saturated soils lose strength and may be contributing to the ongoing movement in this region of the road section. We suspect that some risk of movement would still be present with a properly functioning storm pipe crossing, but it is our opinion that fixing the storm pipe so that water does not saturate the road prism would reduce this risk.

If time allows, a survey monitoring program may help identify where soils are currently moving in the area of the proposed pipe alignments. Pavement failures observed within State Route 112 appear to be associated with the east-bound drive aisles bulging upwards compared to west-bound lanes dropping. We suspect that large boulders were placed along the northern side of the SR 112 alignment to construct the road prism and large boulders could be creating resistance at the face of the slope, creating the bulging behind this resistance zone. A combination of the two may also be occurring. If surveys indicate that the east-bound lanes are bulging upwards and west-bound lanes are more stable, or vice-versa, this may help dictate which lane is more appropriate for future water main alignments. We suspect that surveys through a wet season would be needed, as the soils are more likely to move during saturated conditions.

3.2 Seismic Engineering

3.2.1 Seismic Hazards.

Aside from the direct impact of ground shaking on structures, additional seismic hazards to be considered in a seismic event include ground surface displacement from fault rupture, liquefaction and amplification of ground motion, and landslides.

Surface Displacement: Due to the distance from the site to the nearest known strand (discussed in **Section 2.2**) and the lack of evidence of past fault displacement onsite, we expect the project area to have a low risk for surface displacement.

Liquefaction: The liquefaction potential is highest for loose sand with a high groundwater table. Our explorations encountered fill soils above groundwater elevations, silt and clay soils within groundwater elevations and very dense sedimentary rock. The silt soils encountered in our explorations could liquefy and potentially laterally spread as discussed further in the **Slope Stability** subsection **Section 3.3** below.

Sections of the planned water main upgrades will extend through alluvial soils as documented in the reviewed geology maps. These areas appear to be associated with SR 112 on the north and east sides of Clallam Bay and Front Street in Sekiu. Explorations were not performed along these alignments due to permitting and utility issues within roadways. We expect silt soils would be encountered based on the nearby explorations that could be performed. These soils would have a lower risk than clean sands, but risk could still exist. Borings would be needed to evaluate this risk, but we suspect the financial expenditures to reduce liquefaction settlement risk would not be feasible.

Landslides: The project encompasses several areas of significant landslide hazard risk. Ongoing repair efforts to water mains will be associated with continued earth movement. These more hazardous areas appear to be associated with the City of Sekiu and the eastern region of the planned SR 112 alignment. Other areas within the City of Clallam Bay or the western alignment of SR 112 could have landslide hazards, but were not identified by visual observations. Potential landslide hazard is discussed further in **Section 3.3**.

3.3 Slope Stability

3.3.1 Landslide Hazard

Two areas of the project alignment appear to exist with considerable landslide hazards. These areas include the City of Sekiu and the eastern approximate half of the SR 112 alignment between Clallam Bay and Konopaski Heights Road. Other areas of potential slope instability could exist, but would require significant explorations and monitoring to evaluate the existing factors of safety of the sloping conditions. We provide our opinion of the two areas of existing instability observed based on topographic conditions of the site area and shallow explorations performed. We did not observe indications of soil movement within the City of Clallam Bay.

Sekiu: The City of Sekiu appears to be nearly encompassed by a historic landslide. This can be observed through topographic conditions within the city. Figure B provided below helps demonstrate the surficial conditions of the city and potential affected areas.

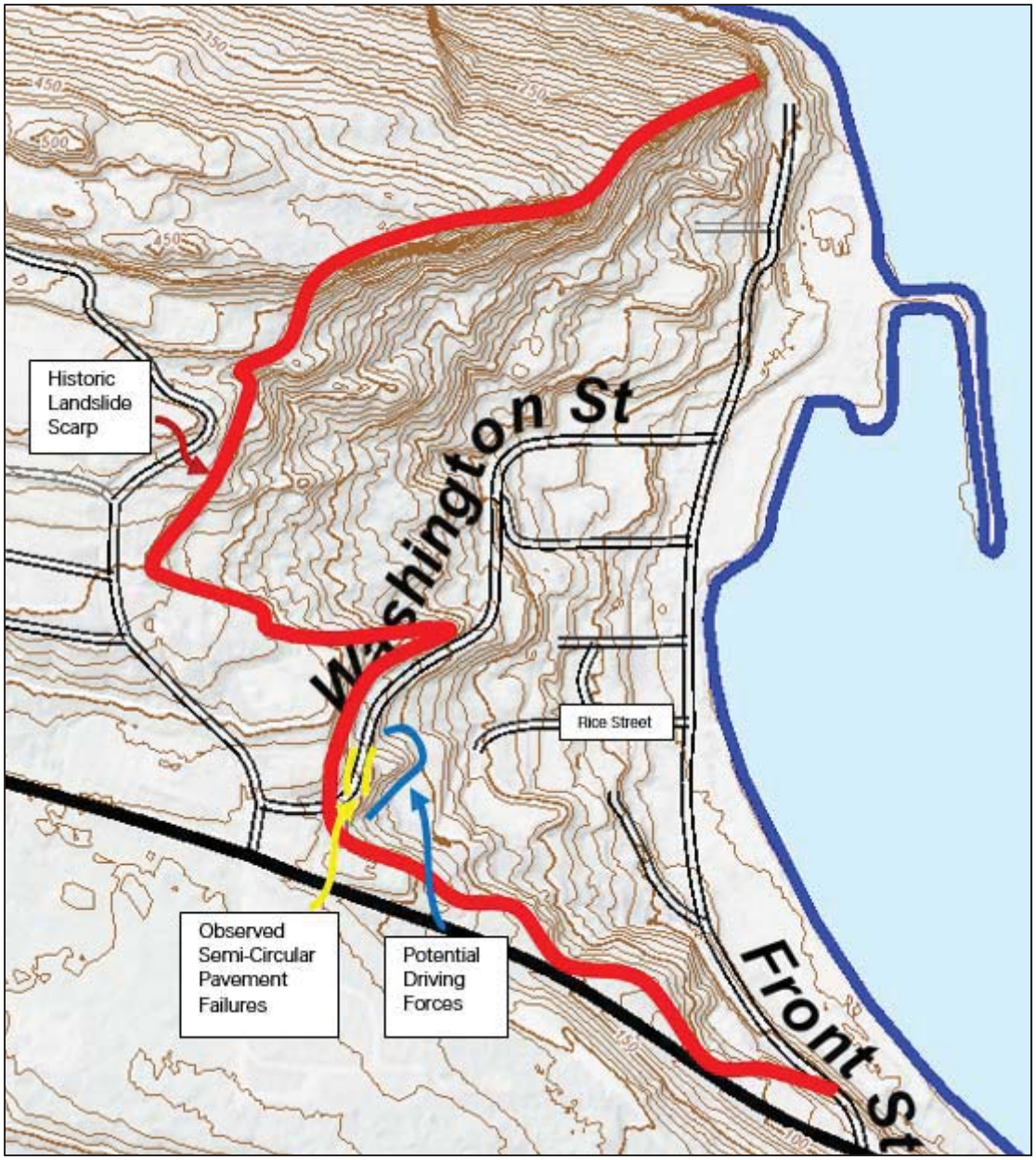

Figure B - Sekiu Landslide Scarp

The above figure illustrates that the City of Sekiu was developed within a historic landslide failure. This can be observed by the sudden change in topographic slope angles at the top of the landslide scarp. The broken (hummocky) topography within the landslide area is an indication of the soil flow from the slide. The slide appears to be associated with either one large event encompassing the city or part of two slides that appear to meet in the central region of Washington Street.

Test pit explorations performed in the area of Sekiu encountered colluvial landslide deposits to the depths explored of approximately 8 feet. The surficial soils encountered in the explorations may be associated with grading activities to develop the City of Sekiu, but the presence of hard

silt clasts in the explorations indicates that the potential fill soils were derived from slide deposits.

While onsite, we observed that pavement failures and patchwork had occurred within the Rice Street asphalt section. We understand that Rice Street has experienced more repair efforts than other locations within Sekiu. We observed semi-circular pavement failures within Washington Street nearly directly above Rice Street to the west. We also observed a large east-west aligned fill/colluvium knob between the pavement failures in Washington Street and Rice Street. We suspect that this soil knob could be providing driving forces on the soils below Rice Street and creating compression forces on the water main underlying the roadway. Deep boring explorations would be needed to more accurately evaluate this assumption.

Eastern State Route 112: The eastern approximate half of SR 112 in the project area appears to be encompassed by a large historic landslide area. This area appears to be associated with multiple slide areas. The slide area is represented in Figure C below.

Coho Estates appears to have been built up on the toe of the large deep-seated slide south of this recreational vehicle park. We suspect that slope instability has been marginally stabilized in the area of Coho Estates due to the weight of the large toe of the slide providing some resistance to the upslope body of the slide. East of Coho Estates we suspect that the toe of a shallower slide has been eroded away due to tidal forces within Clallam Bay. Continued road section movement east of Coho Estates appears to be associated with the eastern edge of the toe of the "Coho Estates" slide.

Pavement cracks were observed at the approximate locations of Mile Post (MP) 16.0 and 16.36. Soil movement appears to still be occurring in these areas. Pavement failures observed appear to be more associated with the east bound lanes bulging upwards. These areas appear to also be associated with two creek crossings. The loose colluvial soil conditions and presence of groundwater would provide for weak soil and easier soil movement conditions. Borings performed at approximate MP 16.0 and 16.36 indicated that the slide debris is about 20 feet in depth underlying the pavement sections.

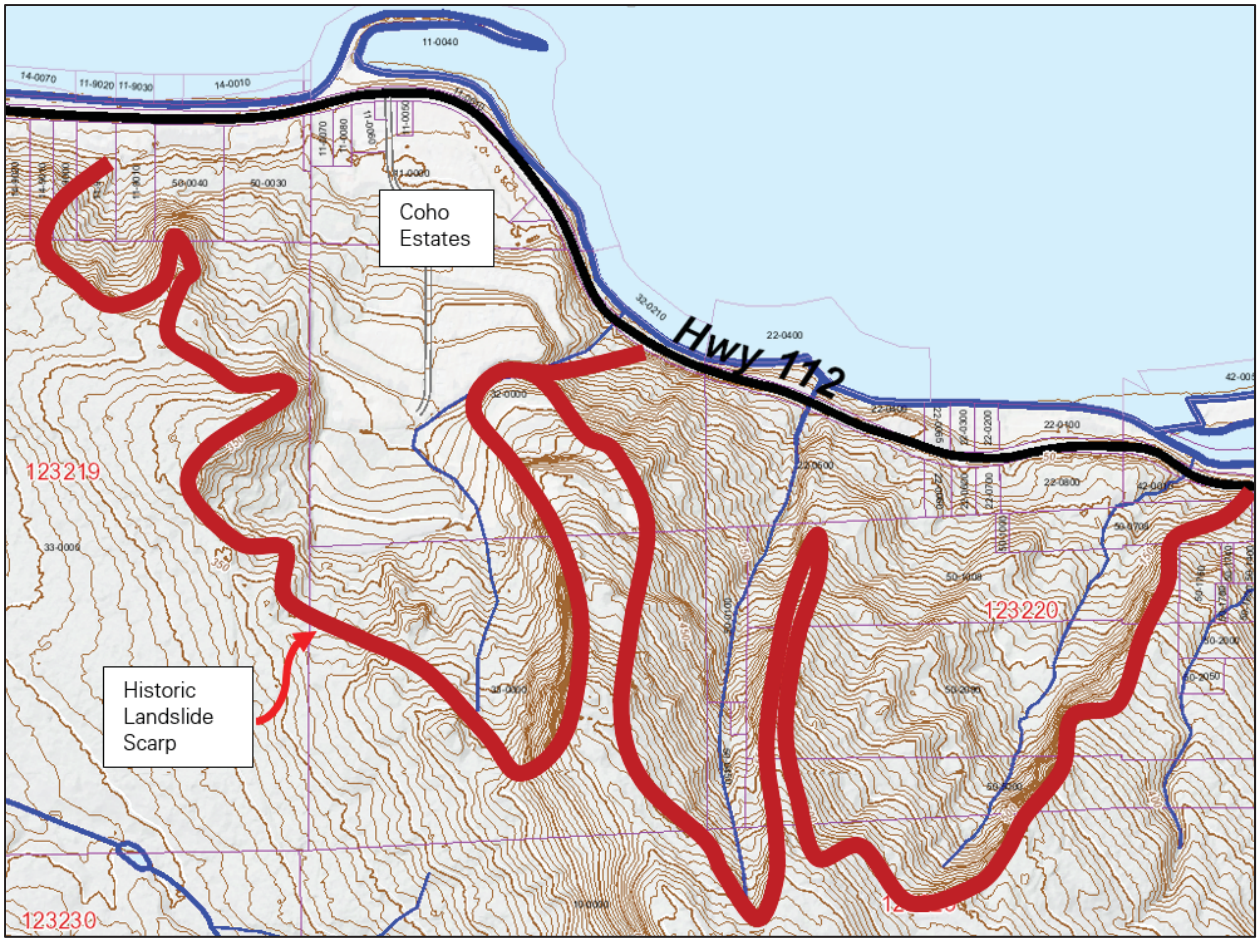

Figure C - Eastern SR 112 Landslide Scarp

3.4 Earthwork and Construction Considerations

3.4.1 Temporary Cuts

Temporary cut slope stability is a function of many factors, such as the type and consistency of soils, depth of the cut, surcharge loads adjacent to the excavation, length of time a cut remains open, and the presence of surface or groundwater. It is exceedingly difficult under these variable conditions to estimate a stable temporary cut slope geometry. Therefore, it should be the responsibility of the contractor to maintain safe slope configurations, since the contractor is continuously at the job site, able to observe the nature and condition of the cut slopes, and able to monitor the subsurface materials and groundwater conditions encountered.

Excavation cuts performed perpendicular and adjacent to steep sloping conditions upwards from the cut, specifically along SR 112, should be continuously shored with shoring boxes independent of depth of the excavation. Soils in this area have shown indications of recent slope movement. Minimal cut depths could create instability of slopes extending upwards from the excavation cut. To reduce needed shoring box systems, we recommend that backfill occurs directly behind water main pipe installation to reduce the potential for long unshored excavations or use of numerous shoring systems directly adjacent to steep slopes. This requirement should apply in locations where the base of the pipe excavation is within a 2 Horizontal to 1 Vertical inclination of the steep slope area. For example,

a 3 foot deep trench located 6 feet away from a steep slope would not require continuous shoring. Pipe installation on the north west-bound lanes of SR 112 would lie outside of these 2H:1V requirements and would not require continuous shoring. Localized areas in the southern east-bound lanes could meet this 2H:1V requirement and would require continuous shoring and immediate backfill. Trenchless technologies such as directional drilling or pipe bursting could reduce this need for continuous shoring. If trenchless installation methods are implemented the pipe manufacturer should comment on potential deflections in the pipe and associated connections of individual pipes.

3.4.2 Structural Fill

All fill placed beneath settlement sensitive features, such as pavement sections, should be placed as structural fill. Structural fill, by definition, is placed in accordance with prescribed methods and standards, and is observed by an experienced geotechnical professional or soils technician. Field observation procedures would include the performance of a representative number of in-place density tests to document the attainment of the desired degree of relative compaction.

The Clallam Bay/Sekiu water main upgrades and connecting Hwy 112 will be constructed with varying installation techniques including open trench and pipe bursting. Open trench techniques will require structural fill above the pipe bedding to reduce settlement potential of the pavement sections. Pipe bedding should follow Clallam County specifications.

Materials: Imported structural fill should consist of a good quality, free-draining granular soil, free of organics and other deleterious material, and be well graded to a maximum size of about 3 inches. Imported materials such as WSDOT 9-03.14(2), Select Borrow, would provide an adequate structural fill specification. Other materials would also apply and can be reviewed prior to installation procedures. Imported, all-weather structural fill should contain no more than 5 percent fines (soil finer than a Standard U.S. No. 200 sieve), based on that fraction passing the U.S. 3/4-inch sieve.

We do not recommend the use of onsite fine grain soils for structural fill. The near surface soils contained a high fine grain soil content and was observed in a majority of our explorations. This material could prove very difficult or even impossible to compact to structural fill specifications. If granular soil, such as sand and gravel, is encountered within the area of pipe installation, this material could be reused as structural fill.

Fill Placement: Fill should be placed in 8- to 10-inch-thick uniform lifts, and each lift should be spread evenly and be thoroughly compacted prior to placement of subsequent lifts. All structural fill within a depth of 2 feet below pavement subgrade, should be compacted to at least 95 percent of its maximum dry density. Maximum dry density, in this report, refers to that density as determined by the ASTM D1557 compaction test procedure. Fill more than 2 feet beneath pavement subgrades should be compacted to at least 90 percent of the maximum dry density. The moisture content of the soil to be compacted should be within about 2 percent of optimum so that a readily compactable condition exists. All compaction should be accomplished by equipment of a type and size sufficient to attain the desired degree of compaction.

3.4.1 Water Main Utilities

We understand the project is considering restrained joints for the planned water main. From

our review, restrained joints are not intended for locations of unstable slopes. The restrained joints could provide resistance to lateral movement, but we suspect this resistance would be minimal and will not stop the lateral movement of the slope.

We suspect that the use of restrained joints could prolong initial repair efforts on the water main pipe due to slope movement. The perpendicular forces on the pipe from the slope movement would get horizontally displaced down the length of the pipe. This could create multiple failures in the pipe alignment towards the sides of the moving slope instead of one failure at the central point of the moving soil.

We considered two locations that the use of restrained joints could be attempted to determine if the system would reduce pipe failures. The first area is associated with the eastern region of SR 112 as shown in Figure D below. It is our opinion that this region of the project is the most susceptible to ongoing slope movement. As discussed above we suspect that the restrained joints could delay the initial repairs of the water main pipe until the maximum deflection of a restrained joint system is met.

While pipe bursting may not provide lateral distribution of forces on the pipe, this method of installation would reduce continuous shoring of open trench installation methods. This region of the project will bisect steep slope hazard areas and areas of continuous slope movement. As per the **Temporary Cuts** subsection of this report, this region should be continuously shored independent of trench depth. Pipe bursting would significantly reduce shoring needs and potentially expedite installation time. **The pipe manufacturer should provide feedback on the potential for pipe deflection and its effect on joints for individual pipes.** Restrained joint pipes may be needed if the connection between fused pipes cannot support pipe movement.

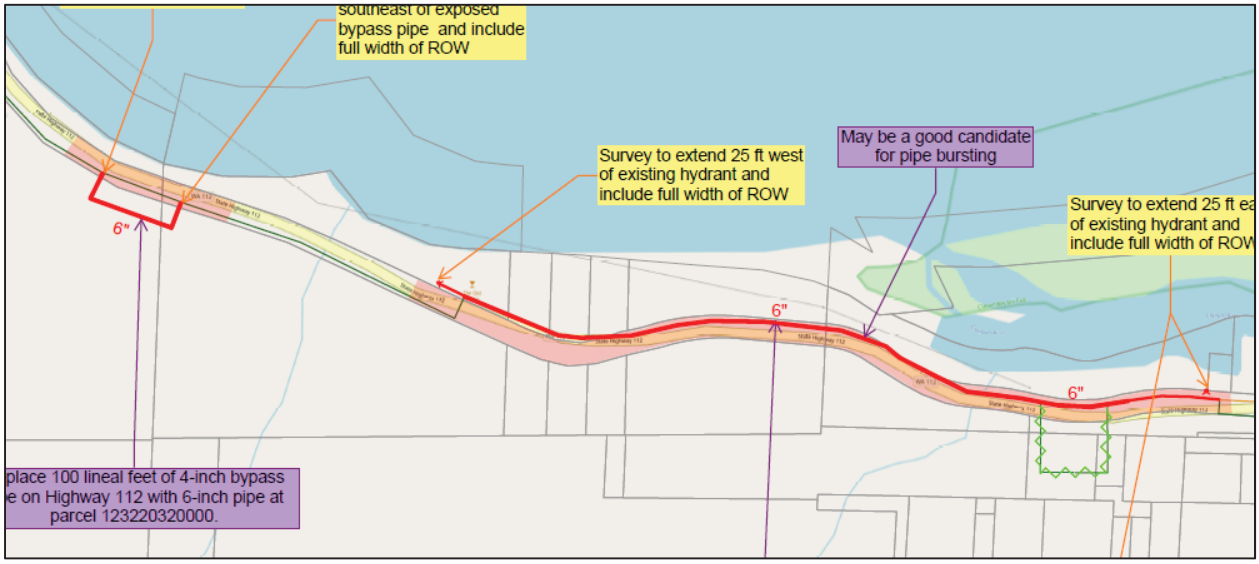

Figure D - SR 112 Potential Locations for Restrained Joint Pipe or Pipe Bursting

We suspect that the use of directional drilling techniques within the SR 112 location would prove difficult. Slope movement potential in this area appears to be occurring from surface elevations to bedrock at approximately 20 feet below grade. The stable bedrock observed below approximately 20 feet would be difficult to drill. A directional drilling contractor could

provide more clarification on this subject. Water main installed to these depths would limit future access to the pipe and additional pipe placement would be needed if failures occur in the pipe.

The second region we believe the restrained joints could potentially be beneficial is within the City of Sekiu, and more specifically Rice Street. This location is presented in Figure E below. While we understand that the pipes in this area are failing under compression, it is possible that restrained joints could distribute the loads down the length of the pipe, deflecting the loads away from the connections on the pipe. We suspect that failures could still occur as the pipe deflects from the compression loads. A structural or materials engineer may be able to evaluate this potential more effectively.

Directional drilling techniques could be beneficial in the Sekiu region to direct pipes below slope movement. Additional deep explorations would be needed to evaluate the depth of the slope movement in this area. The pipes would need to be restrained in the surficial elevations to resist slope movement above the failure plane. We suspect that the depth of the pipe requirements below a failure plane could limit future access to the pipe.

Figure E - City of Sekiu Potential Restrained Joint Location

3.4.2 Dewatering

Our explorations indicate that deep dewatering will not be needed to install standard depth utilities. Anticipated groundwater is expected to be handled with pumps in the trenches. We also expect that some groundwater seepage may develop during and following the wetter times of the year. We expect this seepage to mostly occur in pockets. We do not expect significant volumes of water in these excavations.

We also expect that some groundwater seepage may develop during and following the wetter times of the year. We expect this seepage to mostly occur in pockets. We do not expect

significant volumes of water in these excavations. Encountered groundwater seepage is expected to be handled with pumps in the excavated area.

3.4.3 Wet Weather Considerations

The on-site fine grain soils likely to be exposed during construction will disturb easily when wet. We expect these soils would be difficult, if not impossible, to compact to structural fill specifications in wet weather. We recommend that earthwork be conducted during the drier months. Additional expenses of wet weather or winter construction could include extra excavation and use of imported fill or rock spalls. During wet weather, alternative site preparation methods may be necessary. These methods may include utilizing a smooth-bucket trackhoe to complete site stripping and diverting construction traffic around prepared subgrades. Disturbance to the prepared subgrade may be minimized by placing a blanket of rock spalls or imported sand and gravel in traffic and roadway areas. Cutoff drains or ditches can also be helpful in reducing grading costs during the wet season. These methods can be evaluated at the time of construction.

4 FUTURE WORK

4.1 Engineering and Design

The intent of this geotechnical report is to provide Murraysmith with a professional evaluation of existing subsurface and slope conditions at the site and to provide recommendations for geotechnical design elements of the proposed project.

Once Murraysmith has determined how to proceed with the project, we may be retained to provide additional services including engineering, design work, and project management specific to their chosen design.

4.2 Construction Observation

We should be retained to provide observation and consultation services during construction to confirm that the conditions encountered are consistent with those indicated by the explorations, and to provide recommendations for design changes, should the conditions revealed during the work differ from those anticipated. As part of our services, we would also evaluate whether or not installation activities comply with contract plans and specifications.

We recommend that Robinson Noble perform the following tasks:

- Review contractor submittals
- Perform compaction tests
- Perform laboratory tests as needed
- Attend meetings as needed
- Provide geotechnical consultation

5 USE OF THIS REPORT

We have prepared this report for Murraysmith and their agents, for use in planning and design of this project. The data and report should be provided to prospective contractors for their

bidding and estimating purposes, but our report, conclusions and interpretations should not be construed as a warranty of subsurface conditions.

The scope of our services does not include services related to construction safety precautions, and our recommendations are not intended to direct the contractors' methods, techniques, sequences or procedures, except as specifically described in our report, for consideration in design. There are possible variations in subsurface conditions. We recommend that project planning include contingencies in budget and schedule, should areas be found with conditions that vary from those described in this report.

Within the limitations of scope, schedule and budget for our services, we have strived to take care that our services have been completed in accordance with generally accepted practices followed in this area at the time this report was prepared. No other conditions, expressed or implied, should be understood.

We appreciate the opportunity to be of service to you. If there are any questions concerning this report or if we can provide additional services, please call.

6 REFERENCES

Clallam County. Multipurpose Map. https://websrv19.clallam.net/map/multipurpose_map/

Washington State Department of Natural Resources. *Washington Geologic Information Portal.* https://geologyportal.dnr.wa.gov/

United States Geological Survey (2019). *Quaternary Fault and Fold Database of the United States: Interactive Fault Map.* https://earthquake.usgs.gov/hazards/qfaults/

Cascadia Region Earthquake Workgroup (CREW), 2013. *Cascadia Subduction Zone Earthquakes: A Magnitude 9.0 Earthquake Scenario, Update.* http://crew.org/sites/default/files/cascadia_subduction_scenario_2013.pdf

Cascadia Region Earthquake Workgroup (CREW), 2008. *Cascadia Deep Earthquakes.* http://www.dnr.wa.gov/Publications/ger_ofr2008-1_cascadia_deep_eq.pdf

ROBINSON NOBLE

Note:
Basemap taken from Clallam County interactive web map.

PM: JRW
Sept. 2021
1174-007A

Figure 1
Vicinity Map
Clallam PUD: Clallam Bay, Sekiu Water Main Upgrades

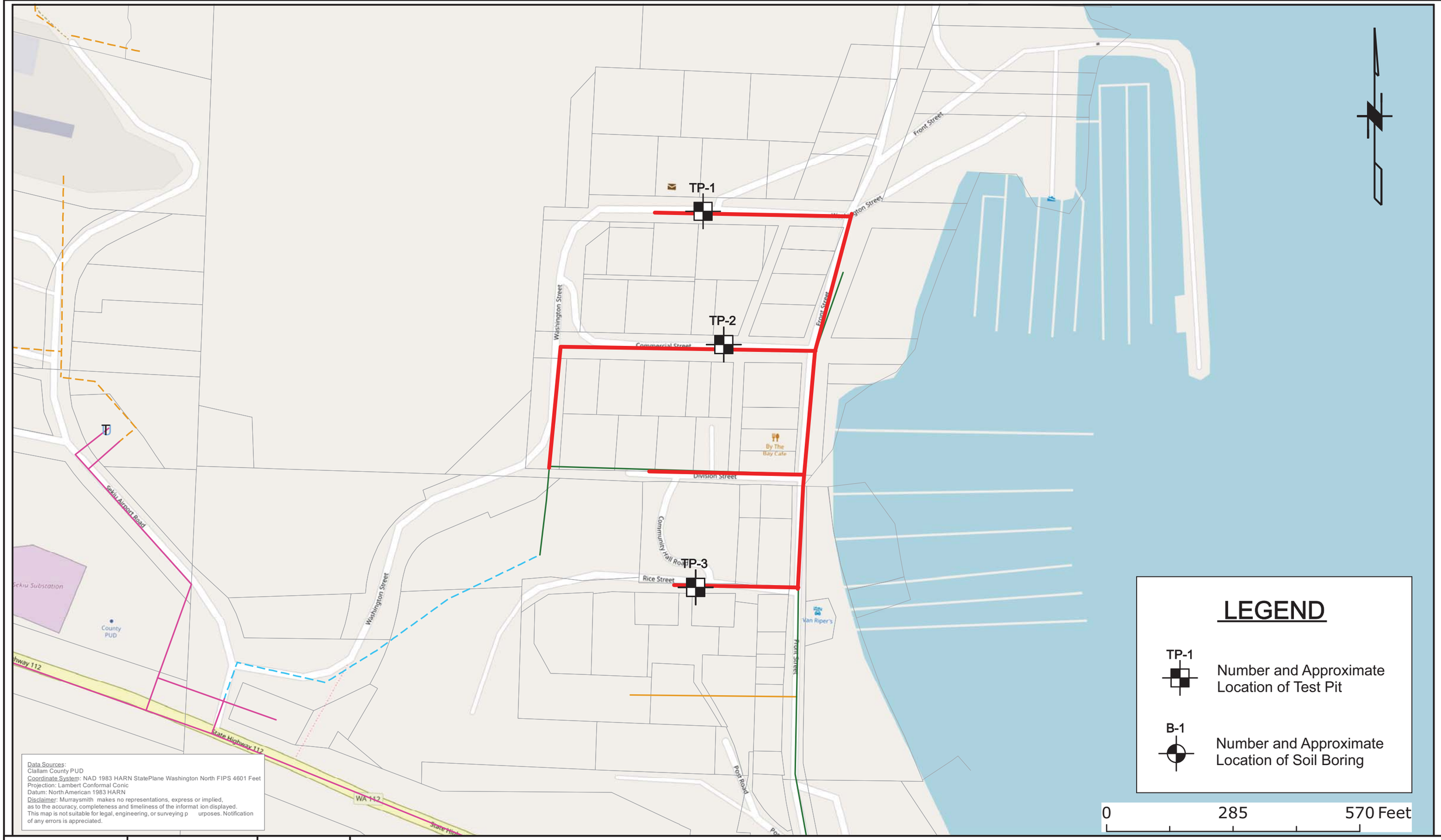

ROBINSON NOBLE

Note: Basemap taken from Site Plan provided by client.

PM: JRW
Sept. 2021
1174-007A

Figure 2a

Site Plan

Clallam PUD: Clallam Bay, Sekiu Water Main Upgrades

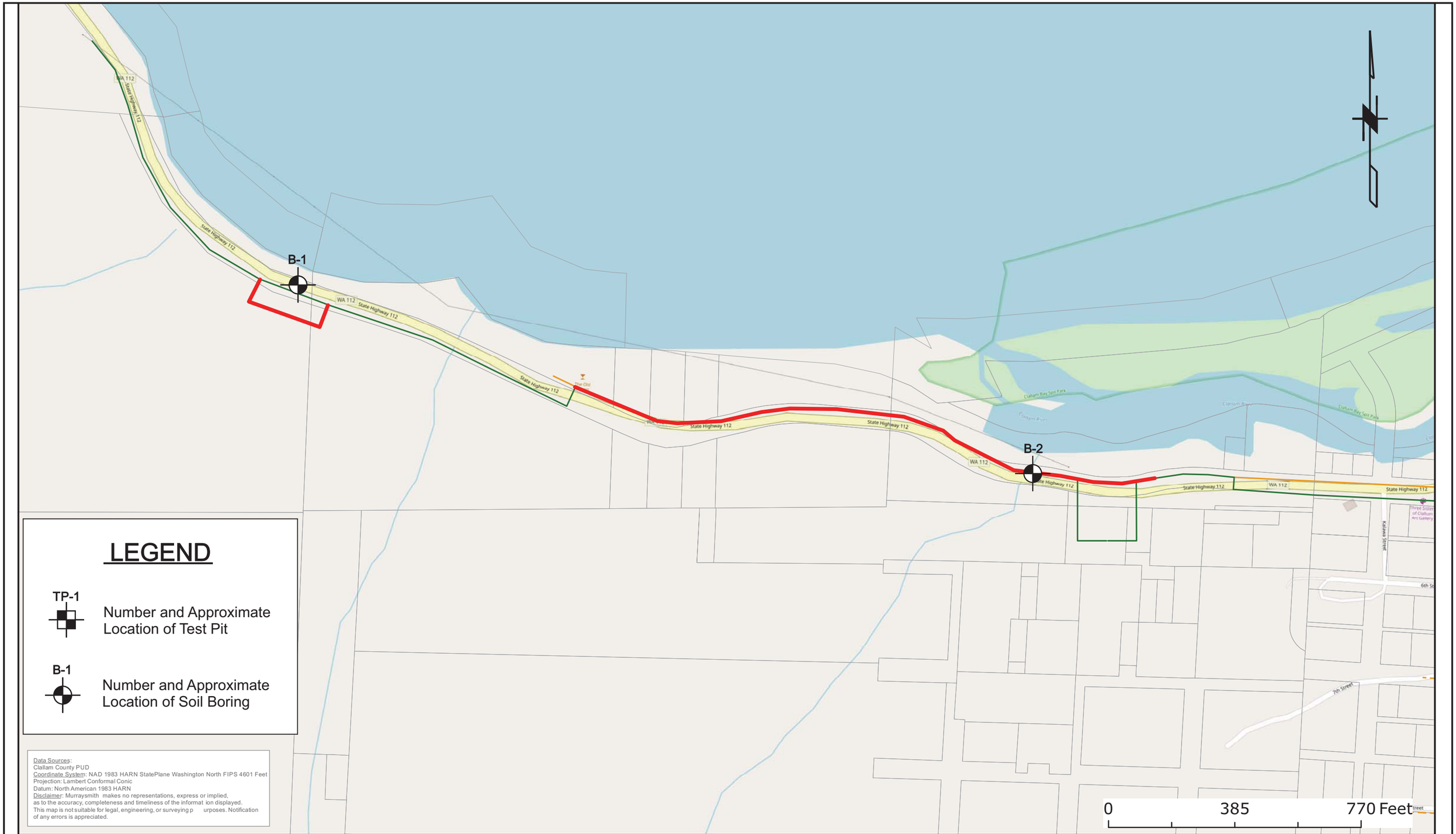

ROBINSON NOBLE

Note: Basemap taken from Site Plan provided by client.

PM: JRW
Sept. 2021
1174-007A

Figure 2b

Site Plan

Clallam PUD: Clallam Bay, Sekiu Water Main Upgrades

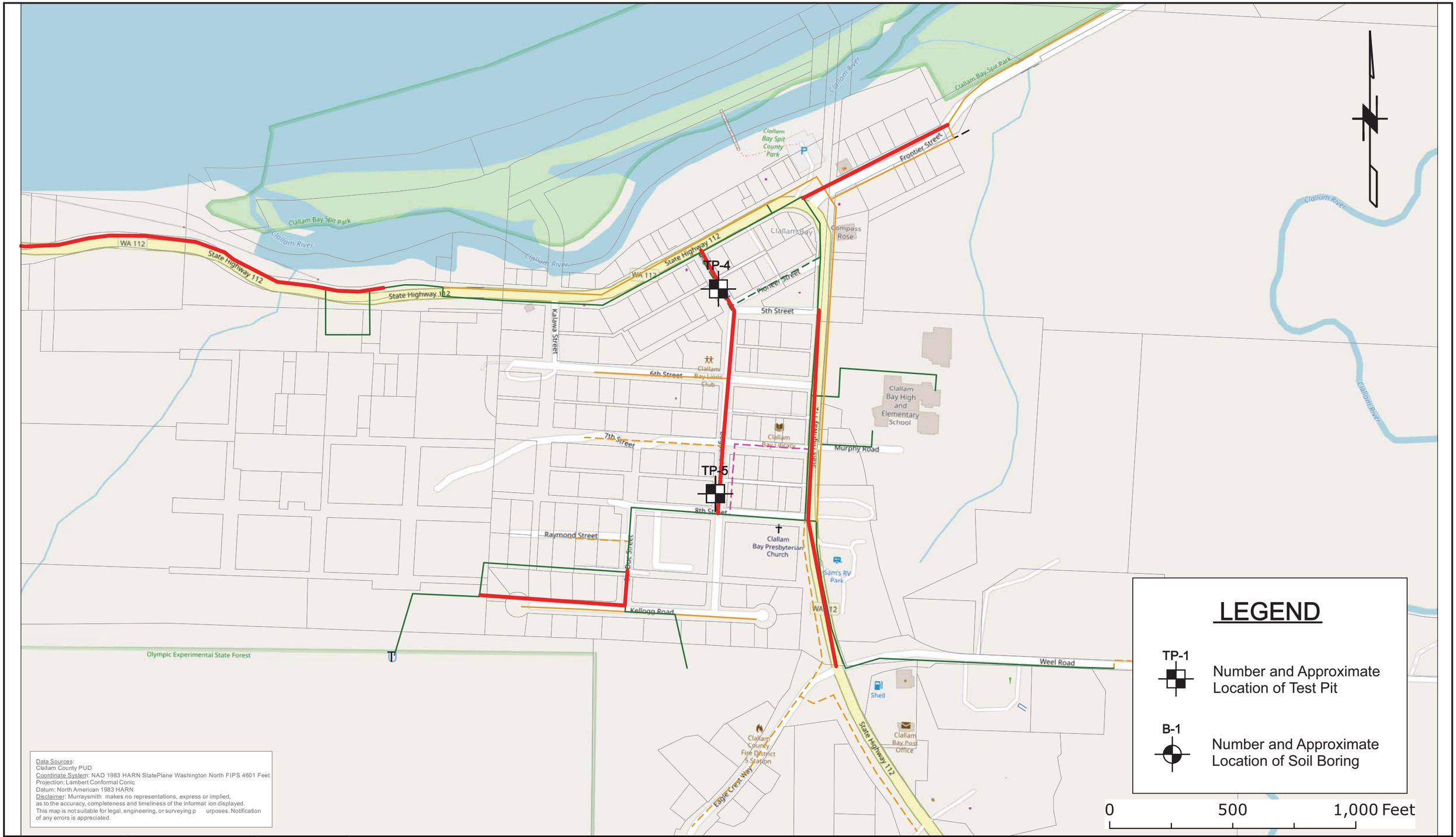

ROBINSON NOBLE

Note: Basemap taken from Site Plan provided by client.

PM: JRW
Sept. 2021
1174-007A

Figure 2c

Site Plan

Clallam PUD: Clallam Bay, Sekiu Water Main Upgrades

UNIFIED SOIL CLASSIFICATION SYSTEM

MAJOR DIVISIONS			GROUP SYMBOL	GROUP NAME
COARSE - GRAINED SOILS MORE THAN 50% RETAINED ON NO. 200 SIEVE	GRAVEL MORE THAN 50% OF COARSE FRACTION RETAINED ON NO. 4 SIEVE	CLEAN GRAVEL	GW	WELL-GRADED GRAVEL, FINE TO COARSE GRAVEL
			GP	POORLY-GRADED GRAVEL
		GRAVEL WITH FINES	GM	SILTY GRAVEL
			GC	CLAYEY GRAVEL
	SAND MORE THAN 50% OF COARSE FRACTION PASSES NO. 4 SIEVE	CLEAN SAND	SW	WELL-GRADED SAND, FINE TO COARSE SAND
			SP	POORLY-GRADED SAND
		SAND WITH FINES	SM	SILTY SAND
			SC	CLAYEY SAND
FINE - GRAINED SOILS MORE THAN 50% PASSES NO. 200 SIEVE	SILT AND CLAY LIQUID LIMIT LESS THAN 50%	INORGANIC	ML	SILT
			CL	CLAY
		ORGANIC	OL	ORGANIC SILT, ORGANIC CLAY
	SILT AND CLAY LIQUID LIMIT 50% OR MORE	INORGANIC	MH	SILT OF HIGH PLASTICITY, ELASTIC SILT
			CH	CLAY OF HIGH PLASTICITY, FAT CLAY
		ORGANIC	OH	ORGANIC CLAY, ORGANIC SILT
HIGHLY ORGANIC SOILS			PT	PEAT

NOTES:

* 1) Field classification is based on visual examination of soil in general accordance with ASTM D 2488-93.

* 2) Soil classification using laboratory tests is based on ASTM D 2487-93.

3) Descriptions of soil density or consistency are based on interpretation of blowcount data, visual appearance, of soils, and/or test data.

* Modifications have been applied to ASTM methods to describe sit and clay content.

$N_{60} = N_M * C_E * C_B * C_R * C_S$

N_M = blows/foot, measured in field

$C_E = ER_m/60$, convert measured hammer energy to 60% for comparison with design charts.

C_B = adjusts borehole diameter

C_R = rod length, adjusts for energy loss in rods

C_S = Sample liner = 1.0

SOIL MOISTURE MODIFIERS

Dry- Absence of moisture, dusty, dry to the touch

Moist- Damp, but no visible water

Wet- Visible free water or saturated, usually soil is obtained from below water table

KEY TO BORING LOG SYMBOLS

▽ Ground water level

● Blows required to drive sample 12 in. using SPT (converted to N_{60})

MC (■) = % Moisture = $\frac{\text{(Weight of water)}}{\text{(Weight of dry soil)}}$

DD = Dry Density

SM — Letter symbol for soil type

Contact between soil strata (Dashed line indicates approximate contact between soils)

ML — Letter symbol for soil type

NOTE: The stratification lines represent the approximate boundaries between soil types and the transition may be gradual

ROBINSON NOBLE

PM: JRW
June 2021
1174-007A

Figure 3

Clallam PUD: Clallam Bay, Sekiu Water Main Upgrades

B-1

Page 1 of 2

Date	3/12/2021	Hole dia. (in)	5
Logged by	JRW	Hole depth ft	30.5
Driller	Holt	Well dia. (in)	N/A
Elevation (ft)	~35	Well depth	N/A
Sample Liner	Yes	Hammer Eff.	88%

LITHOLOGY / DESCRIPTION	U.S.C.	Sample Recovery/ Driven Interval (in)	N- Blow Counts (blows/6")
Asphalt			
Brown silty fine to coarse sand with gravel (loose, moist) **(Fill)**	SM	11/18	7 3 5
Jumbled brown and black silty fine to coarse sand with wood fragments and organics (loose, wet) **(Fill/Colluvium?)**	SM	6/18	2 2 2
Brown silty fine to coarse sand to sandy silt with hard silt clasts (very loose/soft, wet) **(Colluvium)**	SM/ML	3/18	1 1 2
Brown to light brown clayey sandy silt with hard silt clasts (medium stiff, moist to wet) **(Colluvium)**	MH	12/18	2 2 3
Jumbled gray and brown silty clay with trace silt clasts (Stiff, moist to wet) **(Colluvium)**	CL	12/18	2 5 6
Bluish gray silty clay (very stiff, moist)	CL-ML	12/18	4
Grayish brown silty fine subrounded gravel with fine to coarse sand (medium dense, wet)	GM		7
Bluish gray silt in tip (very stiff, moist)	ML		5

Static Water Level

Depth (feet)

Standard Penetration Resistance
(140 lb. weight, 30" drop)
◆ SPT N_{60} (blows/ft)
■ Moisture Content (%)

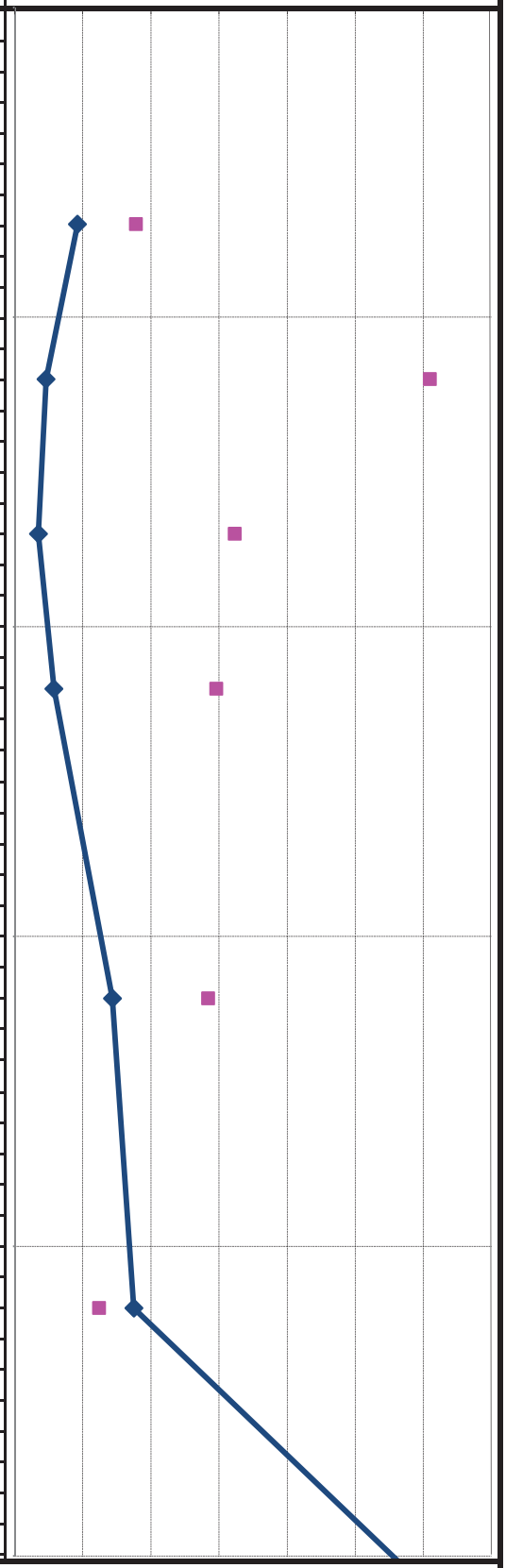

ROBINSON NOBLE

Phone: 253-475-7711
Fax: 253-472-5846

2105 South C Street
Tacoma, Washington 98402

Murraysmith - Clallam Bay PUD Water Main Upgrades

1174-007A

Figure: 4

B-1	Date	3/12/2021	Hole diameter	5
	Logged by	JRW	Hole depth	30.5
	Driller	Holt	Well diameter	N/A
Page 2 of 2	Elevation (ft)	~35	Well depth	N/A
	Sample Liner	Yes	Hammer Eff.	88%

LITHOLOGY / DESCRIPTION	U.S.C.	Sample Recovery/ Driven Interval (in)	N- Blow Counts (blows/6")	Static Water Level
Bluish gray silt (hard, moist)	ML	18/18	13 27 42	
Bluish gray silt (hard, moist)	ML	18/18	19 32 39	
Boring completed at 31.5 feet on April 13, 2021 Groundwater estimate at 6 feet based on moisture contents				

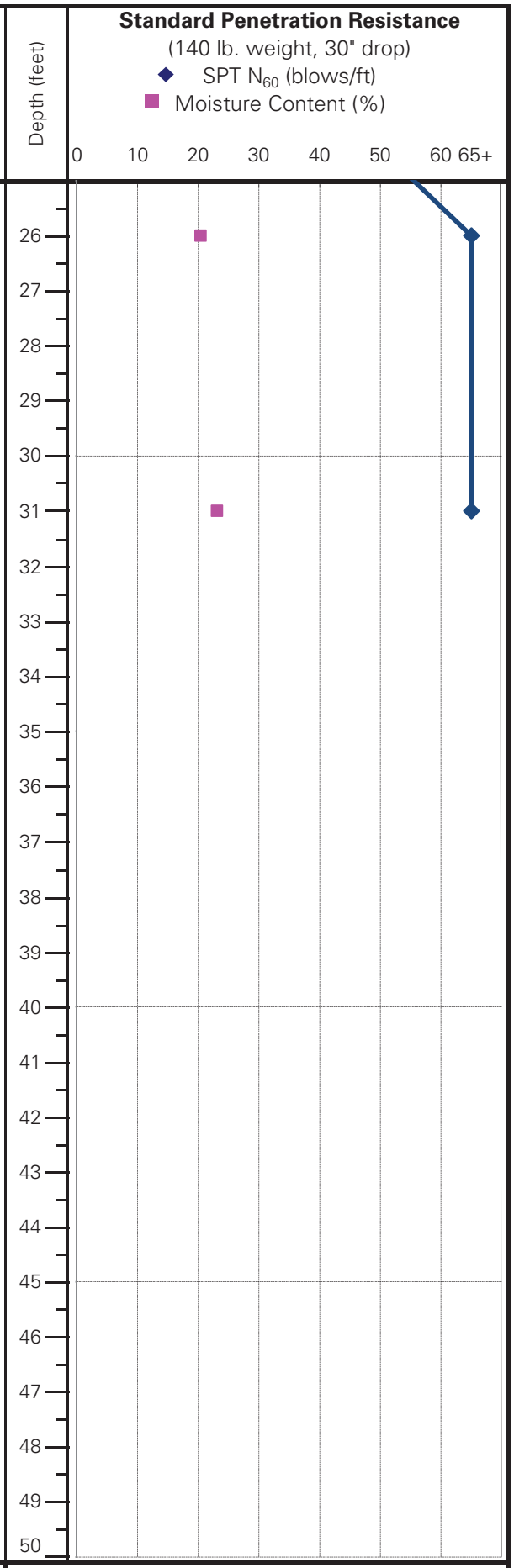

ROBINSON NOBLE

Phone: 253-475-7711
Fax: 253-472-5846

2105 South C Street
Tacoma, Washington 98402

Murraysmith - Clallam Bay PUD Water Main Upgrades

1174-007A

Figure: 5

B-2

Date	3/12/2021	Hole dia. (in)	5
Logged by	JRW	Hole depth ft	30.5
Driller	Holt	Well dia. (in)	N/A
Elevation (ft)	~30	Well depth	N/A
Sample Liner	Yes	Hammer Eff.	88%

LITHOLOGY / DESCRIPTION	U.S.C.	Sample Recovery/ Driven Interval (in)	N- Blow Counts (blows/6")
Asphalt (14")			
Brownish gray silty fine to medium gravel with fine to coarse sand (medium dense, wet) **(Fill)**	SM	6/18	11 10 9
Grayish brown fine to medium angular gravel with fine to coarse sand (loose, wet) **(Crushed Rock Fill)**	GP	4/18	7 5 2
Jumbled brown silty fine sand and bluish gray silty clay with sand and stiff silt clasts (loose/stiff, wet) **(Colluvium)**	SM/ CL-ML	7/18	2 3 5
Grayish brown silty fine to coarse sand with gravel (very loose, wet) (limited sample/drilling spoils?)	SM	1/18	2 1 1
Bluish gray mottled brown silty fine sand with silt clasts (medium dense, wet) **(Colluvium)**	SM	9/18	3 4 7
Jumbled bluish gray sandy silty clay and brown silty fine sand with gravel plug in tip (hard?, wet) **(Colluvium/Siltstone?) (Sampling on rock?)** ? ?	CL-ML /SM	3/18	4 3 50/1

Static Water Level

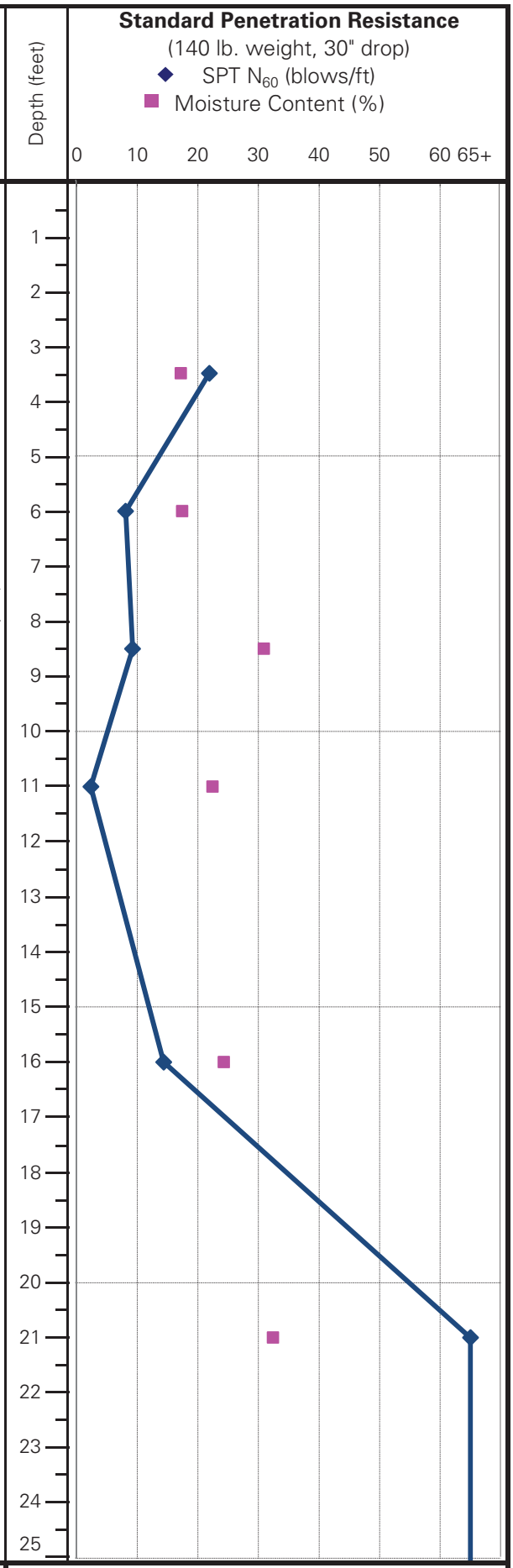

ROBINSON NOBLE
Phone: 253-475-7711
Fax: 253-472-5846
2105 South C Street
Tacoma, Washington 98402

Murraysmith - Clallam Bay PUD Water Main Upgrades

1174-007A

Figure: 6

B-2	Date	3/12/2021	Hole diameter	5
	Logged by	JRW	Hole depth	30.5
	Driller	Holt	Well diameter	N/A
Page 2 of 2	Elevation (ft)	~30	Well depth	N/A
	Sample Liner	Yes	Hammer Eff.	88%

LITHOLOGY / DESCRIPTION	U.S.C.	Sample Recovery/ Driven Interval (in)	N- Blow Counts (blows/6")	Static Water Level
Bluish gray and gray fine sandy silt (hard, moist) **(Siltstone?)**	ML	18/18	31 46 44	
Bluish gray fine sandy silt and trace gravel (hard, moist) (Siltstone?)	ML	5/5	50/5	
Boring completed at 30.5 feet on April 12, 2021 Groundwater estimated at 8 feet based on moisture contents				

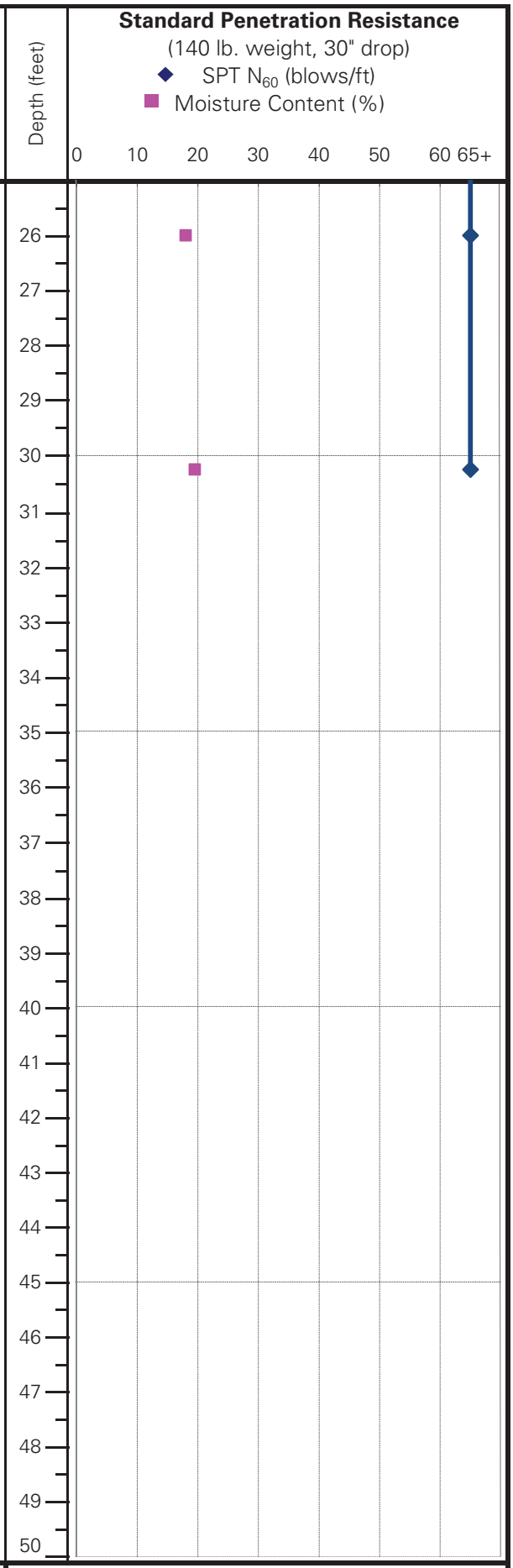

ROBINSON NOBLE

Phone: 253-475-7711
Fax: 253-472-5846

2105 South C Street
Tacoma, Washington 98402

Murraysmith - Clallam Bay PUD Water Main Upgrades

1174-007A

Figure: 7

LOG OF EXPLORATION

DEPTH (ft)	USC	SOIL DESCRIPTION
TEST PIT ONE		
0.0 – 0.7	SM	Dark brown to black silty sand with organics (loose, moist) (**Topsoil**)
0.7 – 4.5	ML	Jumbled brown and gray silt with organics, hard silt clasts and trace sand and gravel (medium stiff to stif, moist) **(Fill/Colluvium?)**
4.5 – 5.4	ML	Jumbled gray and brown silt with sand, gravel and hard silt clasts (medium stiff to stiff, moist) **(Fill/Colluvium?)**
5.5 – 6.0	ML	Gray silt with hard silt clasts, trace sand, gravel, and organics (medium stiff to stiff, wet) **(Colluvium)**
		Samples were collected at 2.0, 5.0 and 5.5 feet Groundwater seepage was not encountered Test pit caving was not encountered Test pit was completed at 6.0 feet on 5/11/2021
TEST PIT TWO		
0.0 – 0.8	SM	Dark brown to black silty sand with organics (loose, moist) **(Topsoil)**
0.8 – 3.0	ML	Jumbled gray and brown sandy silt with roots, gravel and organics (medium stiff to stiff, moist) **(Fill/Colluvium?)**
3.0 – 5.5	ML	Dark gray silt with intermittent light gray sandy silt to silty sand, hard silt clasts and trace sand and gravel (medium stiff to stiff, moist) **(Colluvium)**
		Samples were collected at 2.2, 4.0 and 5.5 feet Groundwater seepage was not encountered Test pit caving was not encountered Test pit was completed at 5.5 feet on 5/11/2021

LOG OF EXPLORATION

DEPTH (ft)	USC	SOIL DESCRIPTION
TEST PIT THREE		
0.0 – 1.2	SM	Brown silty fine to medium sand with gravel and roots (medium dense, moist) **(Fill)**
1.2 – 3.8	ML	Reddish brown slightly mottled gray silt with trace sand and organics (medium stiff, moist) **(Fill)**
3.8 – 5.0	ML	Jumbled reddish brown, brown and gray silt with hard silt clasts and trace sand and gravel (medium stiff to stiff, moist) **(Fill/Colluvium?)**
5.0 – 6.0	ML	Jumbled gray, reddish brown and black silt with organics (medium stiff to stiff, moist) **(Fill/Colluvium?)**
6.0 – 6.4	CL-ML	Jumbled bluish gray and reddish brown silty clay with hard silt clasts (soft to medium stiff, wet) **(Fill/Colluvium?)**
6.4 – 7.8	CL-ML	Bluish gray silty clay with hard silt clasts and trace organics (medium stiff, moist to wet) **(Colluvium)**
		Samples were collected at 2.3, 4.5, 5.8, 6.2 and 6.5 feet Groundwater seepage was not encountered Test pit caving was not encountered Test pit was completed at 7.8 feet on 5/11/2021
TEST PIT FOUR		
0.0 – 0.6	SM	Dark brown to black silty sand with organics (loose, moist) (**Topsoil**)
0.6 – 1.6	SM	Brown silty fine to medium sand with gravel and trash debris (loose to medium dense, moist) **(Fill)**
1.6 – 3.8	SW-SM	Brown fine to coarse sand with silt and gravel (loose to medium dense, moist) **(Fill)**
3.8 – 4.8	SW/GP	Gray fine to coarse sand with gravel to fine to medium gravel with sand (medium dense, wet) **(Fill)**
4.8 – 5.5	ML	Bluish gray silt with organics (medium stiff to stiff, moist to wet) **(Alluvium)**
		Samples were collected at 1.2, 2.6 and 5.5 feet Moderate groundwater seepage was encountered at 4.5 feet Test pit caving was not encountered Test pit was completed at 11.8 feet on 5/11/2021

LOG OF EXPLORATION

DEPTH (ft)	USC	SOIL DESCRIPTION
TEST PIT FIVE		
0.0 – 0.3		Asphalt
0.3 – 0.9	SM	Dark brown silty fine to coarse sand with gravel and organics (medium dense to dense, moist) (Road Subbase) **(Fill)**
0.9 – 3.7	ML	Orangish brown silt with trace sand and gravel (medium stiff, moist) **(Alluvium)**
3.7 – 4.7	SM/ML	Jumbled gray, dark brown and black silty sand with gravel to sandy silt with gravel (dense/very stiff, moist) **(Sedimentary Rock)**
4.7 – 5.0	SM	Brown silty fine to coarse sand with gravel (dense to very dense, moist) **(Sedimentary Rock)**
		Sample was collected at 4.6 feet Groundwater seepage was not encountered Test pit caving was not encountered Test pit was completed at 5.0 feet on 5/11/2021

Appendix B

- WSDOT Plans and Specifications

WSDOT LOG OF BORING DP-1-21

Project: SR 112 Vicinity MP 16.33 Embankment Failure		*Job Number:* XL6517	*Route & MP Range:* SR 112 MP 16.33 - 16.33
Northing: 475,815.2 feet	*Latitude:* 48.253186 deg.	*Driller/Inspector:* Anderson, Corey (#3312T) / Wilson, Jamie (#2941)	
Easting: 803,539.1 feet	*Longitude:* -124.269658 deg.	*Start Card:* SE80154 AE70156	
Elevation: 36.6 feet	*Collector:* Region Survey	*Drilling Method:* Casing Advancer	*Hole Diam.:* 4 in
Horizontal/Vertical Datum: NAD 83/91 HARN, SPN / NAVD88		*Equipment:* CME 45 (ID:9C4-3)	*Rod Type:* HQ
Started: December 8, 2021	*Completed:* December 9, 2021	*Hammer Type:* Autohammer	*Historic Efficiency:* 85.6%

Moisture Content (%) ✖
Fines Content (%) ○
Penetration Resistance (blows/ft)
Field N ◆ SPT N_{60} ◇

Depth (feet)	Elevation (feet)	Blows/6" (N bpf) and other Field Data	Sample Type	Sample Number	Lab Tests	Material Description	Water Observations	Backfill
	35	2 2 1 (3) Rec=0.0'		D-1		NO RECOVERY		
5	30	2 1 2 (3) Rec=0.5'		D-2	GS, AL	SANDY LEAN CLAY WITH GRAVEL, subangular, very loose, brown, moist, homogeneous.		
		1 1 1 (2) Rec=0.4'		D-3		SANDY SILT, subangular, very loose, brown, wet, homogeneous, with trace gravel.		
10	25	0 1 2 (3) Rec=0.8'		D-4	GS, AL	SANDY SILT, subangular to subrounded, very loose, grayish brown, wet, homogeneous, with trace gravel.	12-09-21	
		5 7 9 (16) Rec=1.3'		D-5	GS, AL, HT, SG	LEAN CLAY, very stiff, grayish brown, moist, homogeneous.		
15	20	5 5 6 (11) Rec=1.0'		D-6	GS, AL, HT, SG	LEAN CLAY, stiff, grayish brown, moist, homogeneous.		
		6 8 9 (17) Rec=0.7'		D-7		WELL-GRADED SAND WITH GRAVEL, subrounded, medium dense, brown, wet, homogeneous.		
20	15	7 6 6 (12) Rec=0.8'		D-8	GS, AL	CLAYEY GRAVEL WITH SAND, subrounded, medium dense, brown, wet, homogeneous.		
25	10	25 19 19 (38) Rec=1.0'		D-9	GS, AL	POORLY GRADED SAND WITH SILT AND GRAVEL, subangular to subrounded, dense, greenish gray, moist, homogeneous.		

DRAFT - SUBJECT TO CHANGE

STANDARD BORING LOG XL6517 112 MP 16.33 FAILURE.GPJ 2020 WSDOT GINT TEMPLATE.GDT 1/3/22

CONTINUED NEXT PAGE *(see last page for notes)*

LOG OF BORING DP-1-21

Project: SR 112 Vicinity MP 16.33 Embankment Failure *Job Number:* XL6517 *Route & MP Range:* SR 112 MP 16.33 - 16.33

Depth (feet)	Elevation (feet)	Profile	Moisture Content (%) ✖ Fines Content (%) ○ Penetration Resistance (blows/ft) Field N ◆ SPT N_{60} ◇ (0 20 40 60 80 100)	Blows/6" (N bpf) and other Field Data	Sample Type	Sample Number	Lab Tests	Material Description	Water Observations	Backfill
30			✖ >◇	25 50/5" (REF) Rec=0.9'		D-10	GS, AL, HT, SG	LEAN CLAY, very hard, gray, moist, homogeneous.		

HOLE ENDED AT 30.9 FEET ON 12-9-2021

NOTES:

1. This is a summary log of the boring. Soil/rock descriptions are derived from visual field identifications and laboratory test data (where tested). See exploration log legend for explanation of graphics and abbreviations.
2. The implied accuracy of the location information displayed on this log is typically sub-meter(X,Y) when collected using GPS methods by the Geotechnical Office and sub-centimeter (X,Y,Z) when collected by the Region survey crew.
3. Where oversized samplers were used, a correction was made to the N-value per the AASHTO Manual on Subsurface Investigations, 1988. Blow counts per 6-inch increment have not been corrected.
4. The groundwater level(s), if shown, represents observations made during drilling. The groundwater level should be considered approximate and will vary based on seasonal and other effects.

DRAFT - SUBJECT TO CHANGE

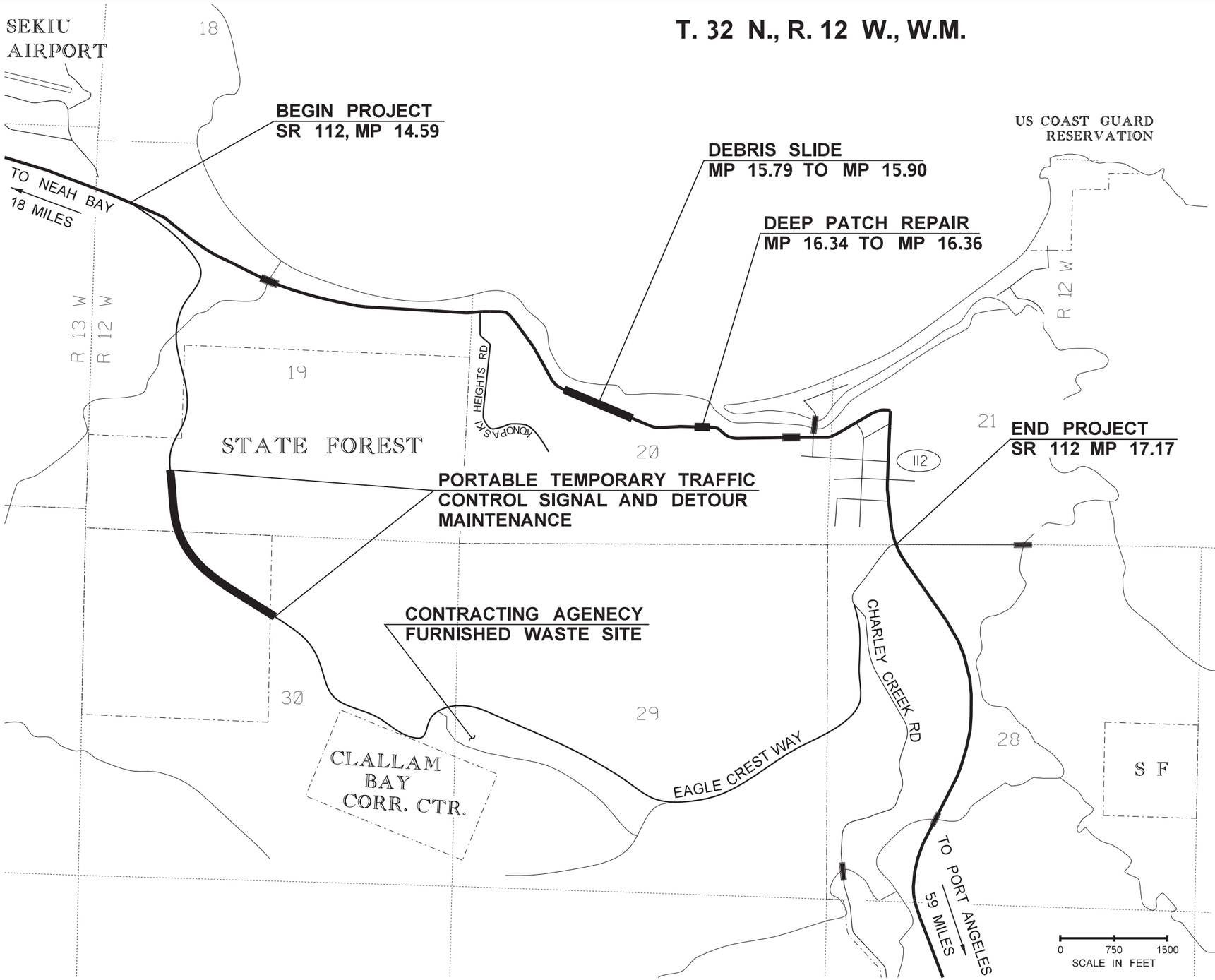

INDEX

SHEET NO.	PLAN REFERENCE NO.	TITLE
1	VM1	INDEX / VICINITY MAP
2 - 3	SQ1 - SQ2	SUMMARY OF QUANTITIES
4 - 5	RS1 - RS2	ROADWAY SECTIONS
6	SR1	SLIDE REMOVAL
7	TCP1	TRAFFIC CONTROL PLAN

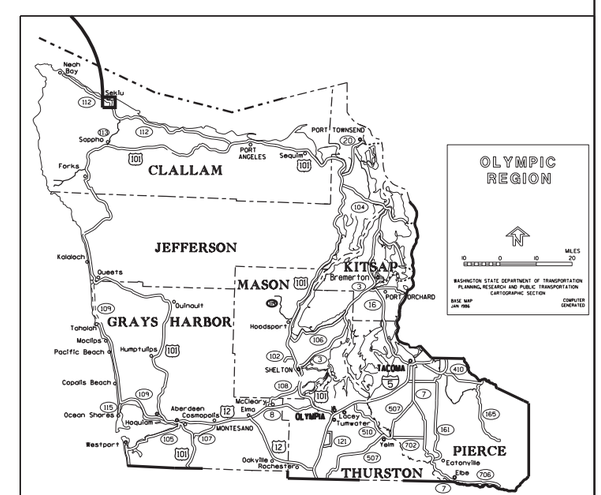

FILE NAME	G:\2 PSE\XL6517 SR 112 Clallam Bay - Emergency Repair\CAE\CAD\ContractPlans\020-VicinityIndex\XL6517_PS_VM.dgn					
TIME	2:04:55 PM					
DATE	1/14/2022					
PLOTTED BY	mckernd					
DESIGNED BY	S. LEZA					
ENTERED BY	S. LEZA					
CHECKED BY	J. TAX, P.E.					
PROJ. ENGR.	D. MCKERNAN, P.E.					
REGIONAL ADM.	S. ROARK, P.E.	REVISION	DATE	BY		

REGION NO.	STATE	FED.AID PROJ.NO.
10	WASH	
JOB NUMBER 22C501		
CONTRACT NO.		LOCATION NO. XL6517

P.E. STAMP BOX DATE

P.E. STAMP BOX DATE

Washington State
Department of Transportation

SR 112
CLALLAM BAY
EMERGENCY REPAIR

INDEX / VICINITY MAP

PLAN REF NO
VM1

SHEET 1 OF 7 SHEETS

DOT_RGG900

1/14/2022

SUMMARY OF QUANTITIES

ITEM NO	TOTAL QUANTITY	SUB-TOTAL * SECTION I-07.2(1) OF STANDARD SPECS	SUB-TOTAL ** SECTION I-07.2(2) OF STANDARD SPECS	STD. ITEM NO.	UNIT	ITEM	GROUP 1 SR 112 MP 15.79 TO 15.90	GROUP 2 SR112 MP 16.30 TO 16.35	GROUP 3 SR 112 EAGLE CREST RD DETOUR	GROUP 4 THIRD PARTY DAMAGES
						PREPARATION				
1	LUMP SUM		LUMP SUM	0001	L.S.	MOBILIZATION	L.S.	L.S.	L.S.	
2	313.00		313.00	0170	L.F.	REMOVING GUARDRAIL	225.00	88.00		
3	LUMP SUM		LUMP SUM	0250	L.S.	REMOVAL AND DISPOSAL OF ASBESTOS MATERIAL		L.S.		
						GRADING				
4	62.00		62.00	0310	C.Y.	ROADWAY EXCAVATION INCL. HAUL	62.00			
5	40000.00		40000.00		C.Y.	SLIDE EXCAVATION INCL. HAUL	40,000.00			
6	786.00		786.00		TON	BORROW FOR GEOSYNTHETIC REINF. DEEP PATCH INCL. HAUL		786.00		
						DRAINAGE				
7	370.00		370.00	1086	TON	QUARRY SPALLS	340.00	30.00		
8	120.00		120.00	3016	L.F.	HIGH-DENSITY POLYETHYLENE (HDPE) PIPE 12 IN. DIAM.	120.00			
9	105.00		105.00	3017	L.F.	HIGH-DENSITY POLYETHYLENE (HDPE) PIPE 18 IN. DIAM.	60.00	45.00		
						STRUCTURE				
10	425.00		425.00	4006	C.Y.	STRUCTURE EXCAVATION CLASS A INCL. HAUL		425.00		
						SURFACING				
11	700.00		700.00	5100	TON	CRUSHED SURFACING BASE COURSE	370.00	230.00	100.00	
						HOT MIX ASPHALT				
12	362.00		362.00	5767	TON	HMA CL. 1/2 IN. PG	310.00	52.00		
13	1.00		1.00	5837	DOL	ASPHALT COST PRICE ADJUSTMENT	1.00			
						EROSION CONTROL AND ROADSIDE PLANTING				
14	LUMP SUM		LUMP SUM	6488	L.S.	EROSION CONTROL AND WATER POLLUTION PREVENTION	L.S.			
15	9.00		9.00	6403	DAY	ESC LEAD	9.00			
16	5.53		5.53	6414	ACRE	SEEDING, FERTILIZING, AND MULCHING	5.53			
17	12250.00		12250.00	6455	S.Y.	EROSION CONTROL BLANKET	12,250.00			
						TRAFFIC				
18	313.00		313.00	6757	L.F.	BEAM GUARDRAIL TYPE 31	225.00	88.00		
19	6.00		6.00	6832	EACH	FLEXIBLE GUIDE POST	6.00			
20	1915.00		1915.00	6806	L.F.	PAINT LINE	1,740.00	175.00		
21	10000.00		10000.00		DOL	PORTABLE TEMPORARY TRAFFIC CONTROL SIGNAL			10,000.00	
22	2688.00		2688.00	6993	HR	PORTABLE CHANGEABLE MESSAGE SIGN			2,688.00	
23	LUMP SUM		LUMP SUM	6973	L.S.	OTHER TEMPORARY TRAFFIC CONTROL			L.S.	
24	480.00		480.00	6980	HR	FLAGGERS			480.00	
25	480.00		480.00	6992	HR	OTHER TRAFFIC CONTROL LABOR			480.00	
26	LUMP SUM		LUMP SUM	6974	L.S.	TRAFFIC CONTROL SUPERVISOR			L.S.	
27	313.00		313.00	6982	S.F.	CONSTRUCTION SIGNS CLASS A	313.00			
						OTHER ITEMS				
28	210.00		210.00	7006	C.Y.	STRUCTURE EXCAVATION CLASS B INCL. HAUL	166.00	44.00		
29	LUMP SUM		LUMP SUM	7350	L.S.	CLEANING EXISTING DRAINAGE STRUCTURE	L.S.			
30	80000.00		80000.00		DOL	FORCE ACCOUNT MAINTENANCE OF DETOUR			80,000.00	
31	4000.00		4000.00	7480	DOL	ROADSIDE CLEANUP	2,000.00	2,000.00		

GROUP LEGEND

GROUP NUMBER	SR	CONTROL SECTION	TAX SCHEDULE	FUND PARTICIPANTS
1	112	053600	**	STATE
2	112	053600	**	STATE
3	112	053600	**	STATE
4	112	053600	**	STATE

DATE	REVISION	BY

REGION	STATE	FEDERAL AID PROJECT. NO.
10	WA	

JOB NUMBER 22C501/2

CONTRACT NO 000000

Washington State Department of Transportation

SR 112
CLALLAM BAY
EMERGENCY REPAIRS

SUMMARY OF QUANTITIES

SQ1

SHEET 2 OF 7 SHEETS

SUMMARY OF QUANTITIES

ITEM NO	TOTAL QUANTITY	SUB-TOTAL * SECTION I-07.2(1) OF STANDARD SPECS	SUB-TOTAL ** SECTION I-07.2(2) OF STANDARD SPECS	STD. ITEM NO.	UNIT	ITEM	GROUP 1 SR 112 MP 15.79 TO 15.90	GROUP 2 SR112 MP 16.30 TO 16.35	GROUP 3 SR 112 EAGLE CREST RD DETOUR	GROUP 4 THIRD PARTY DAMAGES
32	5.00		5.00	7725	DOL	REIMBURSEMENT FOR THIRD PARTY DAMAGE				5.00
33	3.00		3.00	7728	DOL	MINOR CHANGE	1.00	1.00	1.00	
34	3.00		3.00	7732	DOL	AGGREGATE COMPLIANCE PRICE ADJUSTMENT	1.00	1.00	1.00	
35	LUMP SUM		LUMP SUM	7736	L.S.	SPCC PLAN	L.S.	L.S.	L.S.	
36	255.00		255.00	7554	S.Y.	CONSTRUCTION GEOTEXTILE FOR PERMANENT EROSION CONTROL	255.00			
37	1150.00		1150.00		S.F.	TURF REINFORCEMENT MAT		1,150.00		
38	8200.00		8200.00		S.F.	INSTALLATION OF GEOGRID		8,200.00		

GROUP LEGEND

GROUP NUMBER	SR	CONTROL SECTION	TAX SCHEDULE	FUND PARTICIPANTS
1	112	053600	**	STATE
2	112	053600	**	STATE
3	112	053600	**	STATE
4	112	053600	**	STATE

DATE	REVISION	BY

REGION	STATE	FEDERAL AID PROJECT. NO.
10	WA	

JOB NUMBER 22C501/2

CONTRACT NO 000000

Washington State Department of Transportation

SR 112
CLALLAM BAY
EMERGENCY REPAIRS

SUMMARY OF QUANTITIES

SQ2

STRUCTURE NOTES - DRAINAGE

		HIGH-DENSITY POLYETHYLENE (HDPE) PIPE 12 IN. DIAM.	HIGH-DENSITY POLYETHYLENE (HDPE) PIPE 18 IN. DIAM.	QUARRY SPALLS	STRUCTURE EXCAVATION CLASS B	CLEAN EXISTING DRAINAGE STRUCTURE	SEE GENERAL NOTES
CODE	LOCATION	L.F.	L.F.	TON	C.Y.	L.S.	
RS1-A	SR 112 MP 15.83	60		10	54		1, 2, 4
RS1-B	SR 112 MP 15.85		60	10	58		1, 2, 4
RS1-C	SR 112 MP 15.87	60		10	54		1, 2, 4
RS1-D	SR 112 MP 15.90			10		1	2, 3
RS2-A	SR 112 MP 16.33		45	10	44		1, 2, 4

GENERAL NOTES:

1. SEE STANDARD SPECIFICATION 9-05.19
2. SEE STANDARD SPECIFICATION 9-13.1
3. SEE STANDARD SPECIFICATION 7-07
4. SEE STANDARD PLAN B-55.20-03

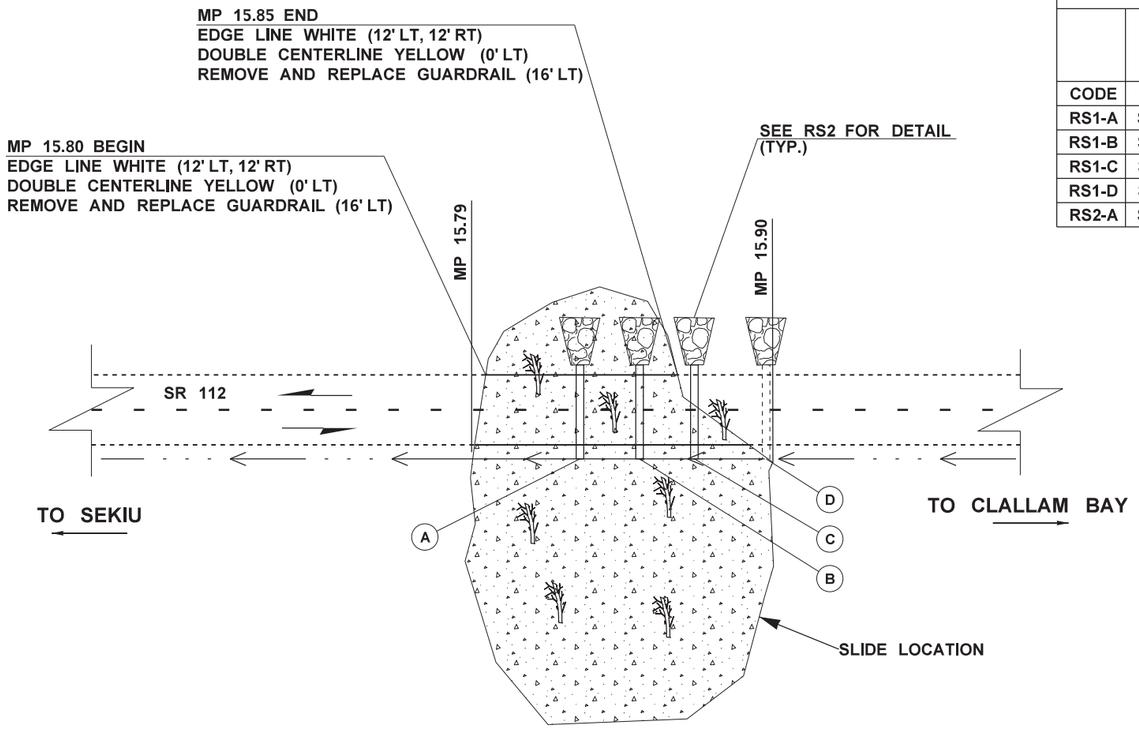

SR 112 PLAN VIEW

(NOT TO SCALE)

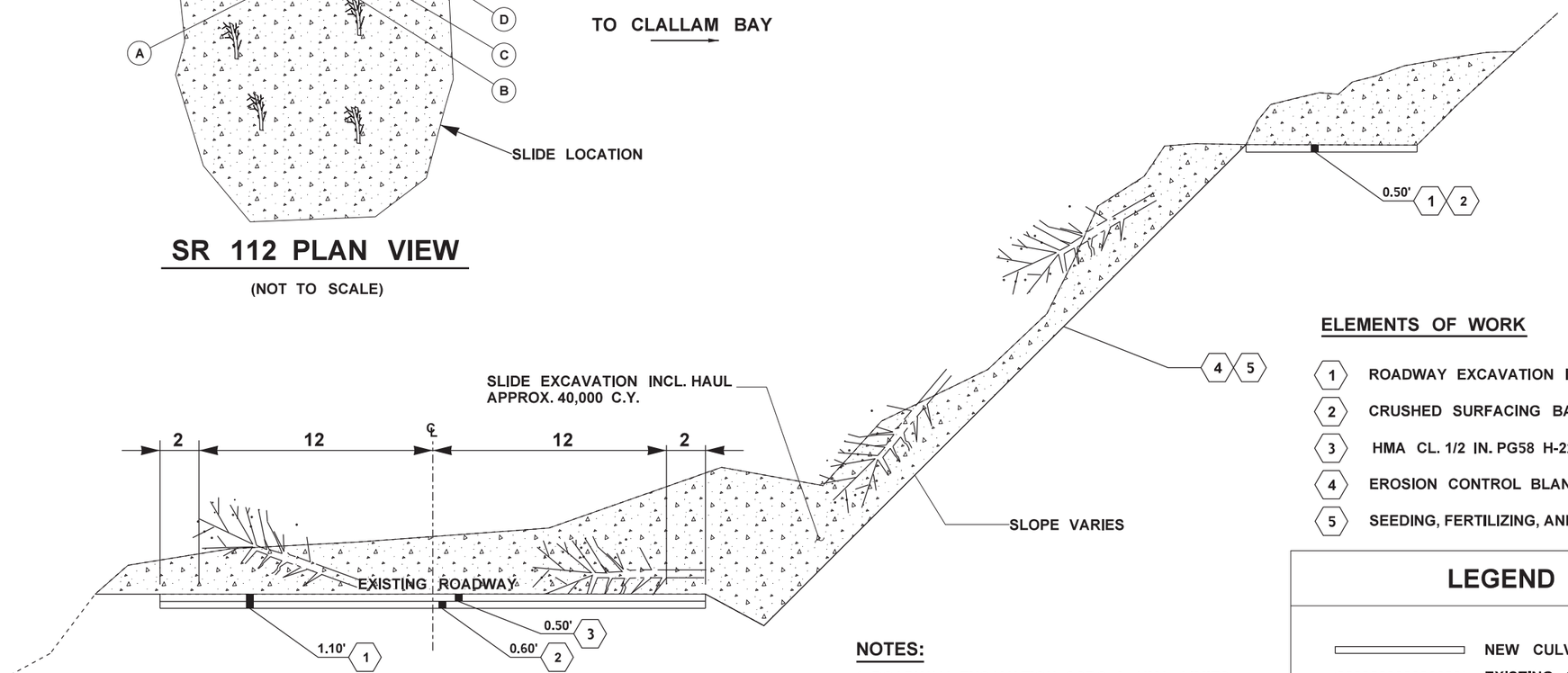

ROADWAY SECTION A

(NOT TO SCALE)
MP 15.79 TO MP 15.90

ELEMENTS OF WORK

1. ROADWAY EXCAVATION INCL. HAUL
2. CRUSHED SURFACING BASE COURSE
3. HMA CL. 1/2 IN. PG58 H-22
4. EROSION CONTROL BLANKET
5. SEEDING, FERTILIZING, AND MULCHING

NOTES:

1. ROADWAY EXCAVATION, CSBC, & HMA LIMITS ARE APPROXIMATELY MP 15.80 TO MP 15.85
2. ALL DIMENSIONS SHOWN ARE IN FEET UNLESS OTHERWISE DESIGNATED.

LEGEND

- NEW CULVERT
- EXISTING CULVERT
- DITCH LINE
- EXISTING DITCH
- SLIDE EXCAVATION

FILE NAME	G:\2 PSE\XL6517 SR 112 Clallam Bay - Emergency Repair\CAE\CAD\ContractPlans\050-RdwySec\PS_RS.dgn
TIME	1:26:07 PM
DATE	1/14/2022
PLOTTED BY	mckernd
DESIGNED BY	B. SLUIS
ENTERED BY	B. SLUIS
CHECKED BY	J. TAX, P.E.
PROJ. ENGR.	D. MCKERNAN, P.E.
REGIONAL ADM.	S. ROARK, P.E.

REVISION | DATE | BY

REGION NO. 10 | STATE WASH | FED.AID PROJ.NO.

JOB NUMBER 22C501

CONTRACT NO. | LOCATION NO. XL6517

P.E. STAMP BOX — DATE

P.E. STAMP BOX — DATE

Washington State Department of Transportation

SR 112
CLALLAM BAY
EMERGENCY REPAIRS

ROADWAY SECTIONS

Plot 2

PLAN REF NO RS1

SHEET 4 OF 7 SHEETS

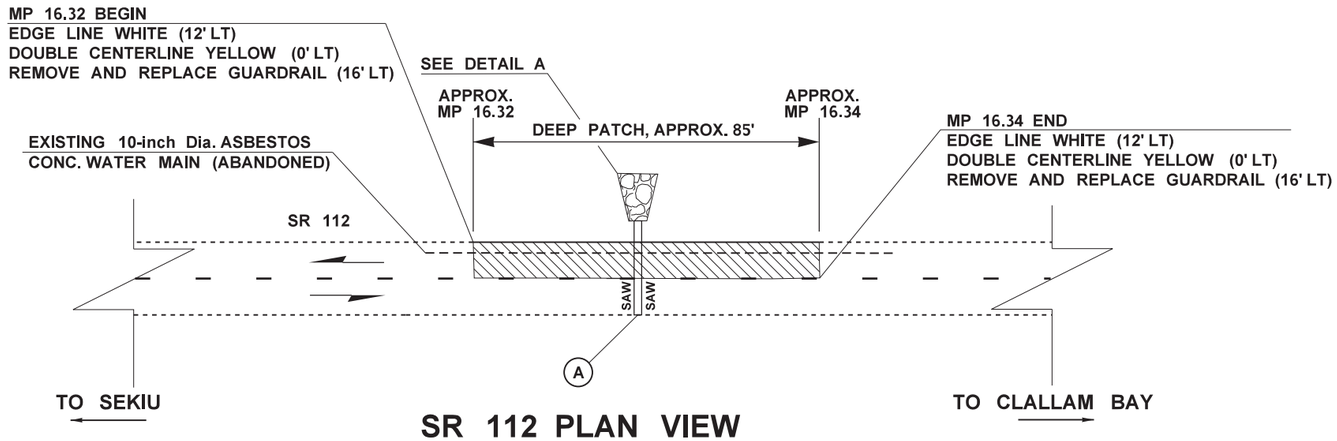

SR 112 PLAN VIEW

(NOT TO SCALE)

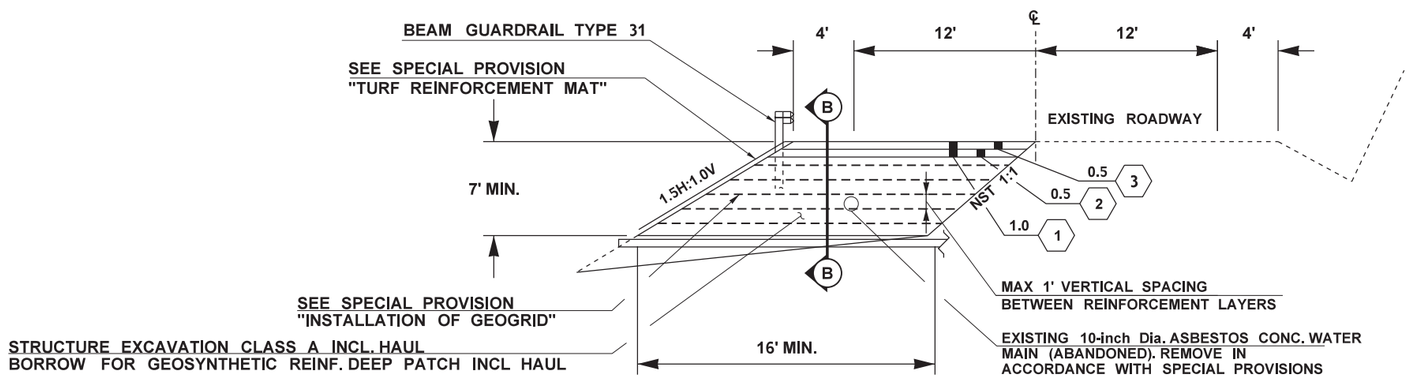

ROADWAY SECTION B

(NOT TO SCALE)
MP 16.33

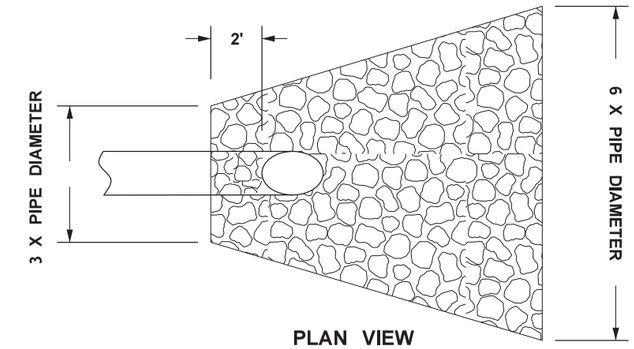

PLAN VIEW

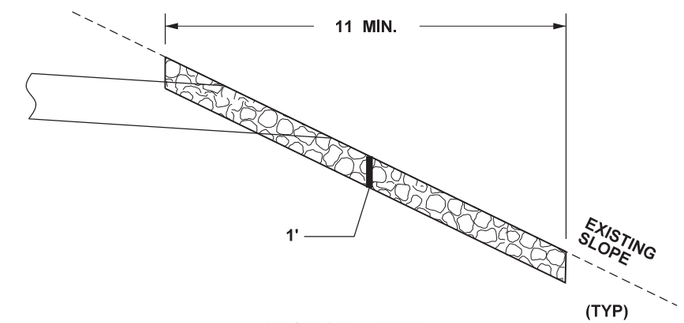

SECTION VIEW

DETAIL A (TYP.)

(NOT TO SCALE)

ELEMENTS OF WORK

1. ROADWAY EXCAVATION INCL. HAUL
2. CRUSHED SURFACING BASE COURSE
3. HMA CL. 1/2 IN. PG58 H-22

NOTES:

1. DEPTHS SHOWN ARE COMPACTED DEPTHS COURSE DEPTHS AND COMPACTION SHALL BE AS DEFINED IN THE STANDARD SPECIFICATIONS
2. ALL DIMENSIONS SHOWN ARE IN FEET UNLESS OTHERWISE DESIGNATED.

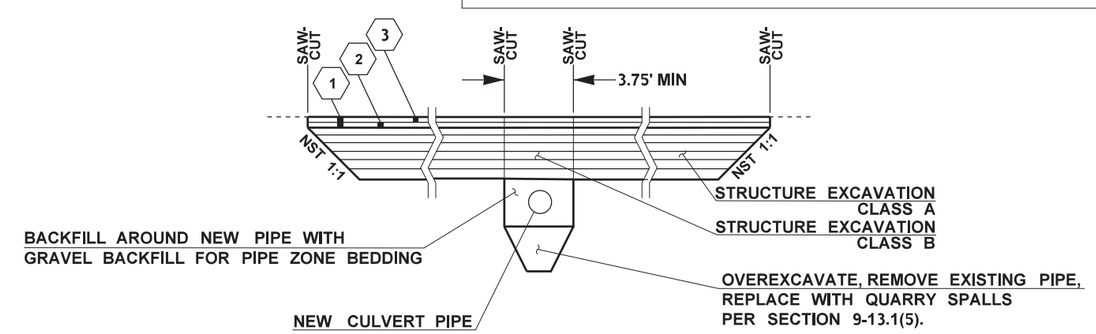

SR 112 PROFILE VIEW
SECTION B-B

(NOT TO SCALE)

FILE NAME	G:\2 PSE\XL6517 SR 112 Clallam Bay - Emergency Repair\CAE\CAD\ContractPlans\050-RdwySec\PS_RS.dgn				REGION NO. 10	STATE WASH	FED.AID PROJ.NO.
TIME	9:00:41 AM						
DATE	1/18/2022				JOB NUMBER 22C501		
PLOTTED BY	mckernd						
DESIGNED BY	B. SLUIS						
ENTERED BY	B. SLUIS				CONTRACT NO.		LOCATION NO. XL6517
CHECKED BY	J. TAX, P.E.						
PROJ. ENGR.	D. MCKERNAN, P.E.						
REGIONAL ADM.	S. ROARK, P.E.	REVISION	DATE	BY			

DANIEL D. MCKERNAN, STATE OF WASHINGTON, 41402, REGISTERED PROFESSIONAL ENGINEER
Digitally signed by Dan McKernan Date: 2022.01.18 09:06:42 -08'00'
DATE
P.E. STAMP BOX

DATE
P.E. STAMP BOX

Washington State Department of Transportation

SR 112
CLALLAM BAY
EMERGENCY REPAIRS

ROADWAY SECTIONS

Plot 1
PLAN REF NO RS2
SHEET 5 OF 7 SHEETS

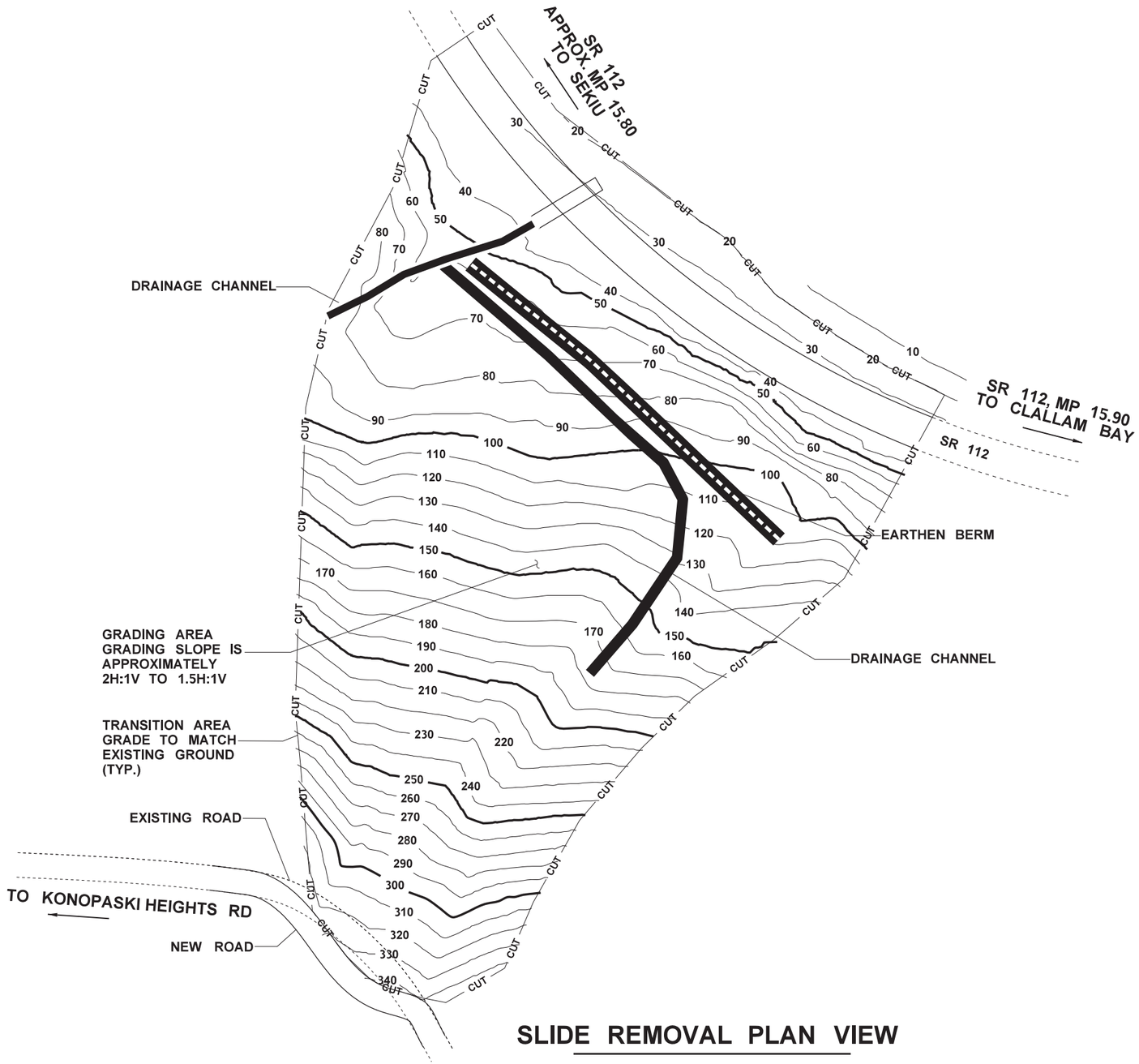

SLIDE REMOVAL PLAN VIEW

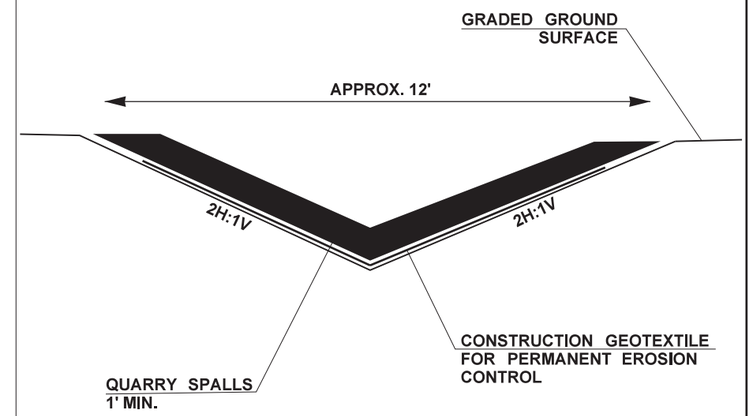

DRAINAGE CHANNEL DETAIL

(NOT TO SCALE)

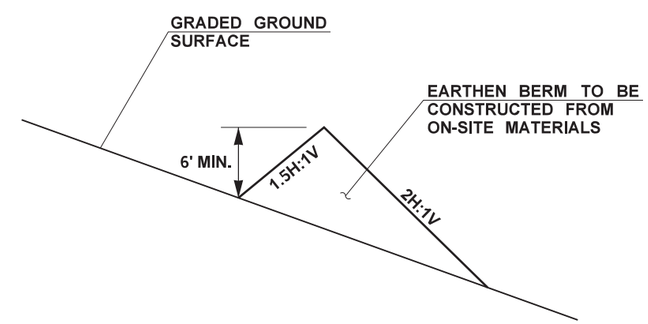

EARTHEN BERM DETAIL

(NOT TO SCALE)

N

0 37.5 75
SCALE IN FEET

LEGEND

150	INDEX CONTOUR
140	INTERMEDIATE CONTOUR
	NEW CULVERT

FILE NAME	G:\2 PSE\XL6517 SR 112 Clallam Bay - Emergency Repair\CAE\CAD\ContractPlans\100-SlideRemoval\SlideRemove_Details.dgn				REGION NO. 10	STATE WASH	FED.AID PROJ.NO.
TIME	1:34:03 PM				JOB NUMBER 22C501		
DATE	1/14/2022						
PLOTTED BY	mckernd						
DESIGNED BY	B. SLUIS						
ENTERED BY	B. SLUIS						
CHECKED BY	J. TAX, P.E.				CONTRACT NO.		LOCATION NO. XL6517
PROJ. ENGR.	D. MCKERNAN, P.E.						
REGIONAL ADM.	S. ROARK, P.E.	REVISION	DATE	BY			

DANIEL D. McKERNAN STATE OF WASHINGTON 41402 REGISTERED PROFESSIONAL ENGINEER
Digitally signed by Dan McKernan
Date: 2022.01.14 13:33:08-08'00'
DATE
P.E. STAMP BOX

DATE
P.E. STAMP BOX

Washington State
Department of Transportation

SR112
CLALLAM BAY
EMERGENCY REPAIRS

SLIDE REMOVAL

Plot 1
PLAN REF NO
SR1
SHEET 6 OF 7 SHEETS

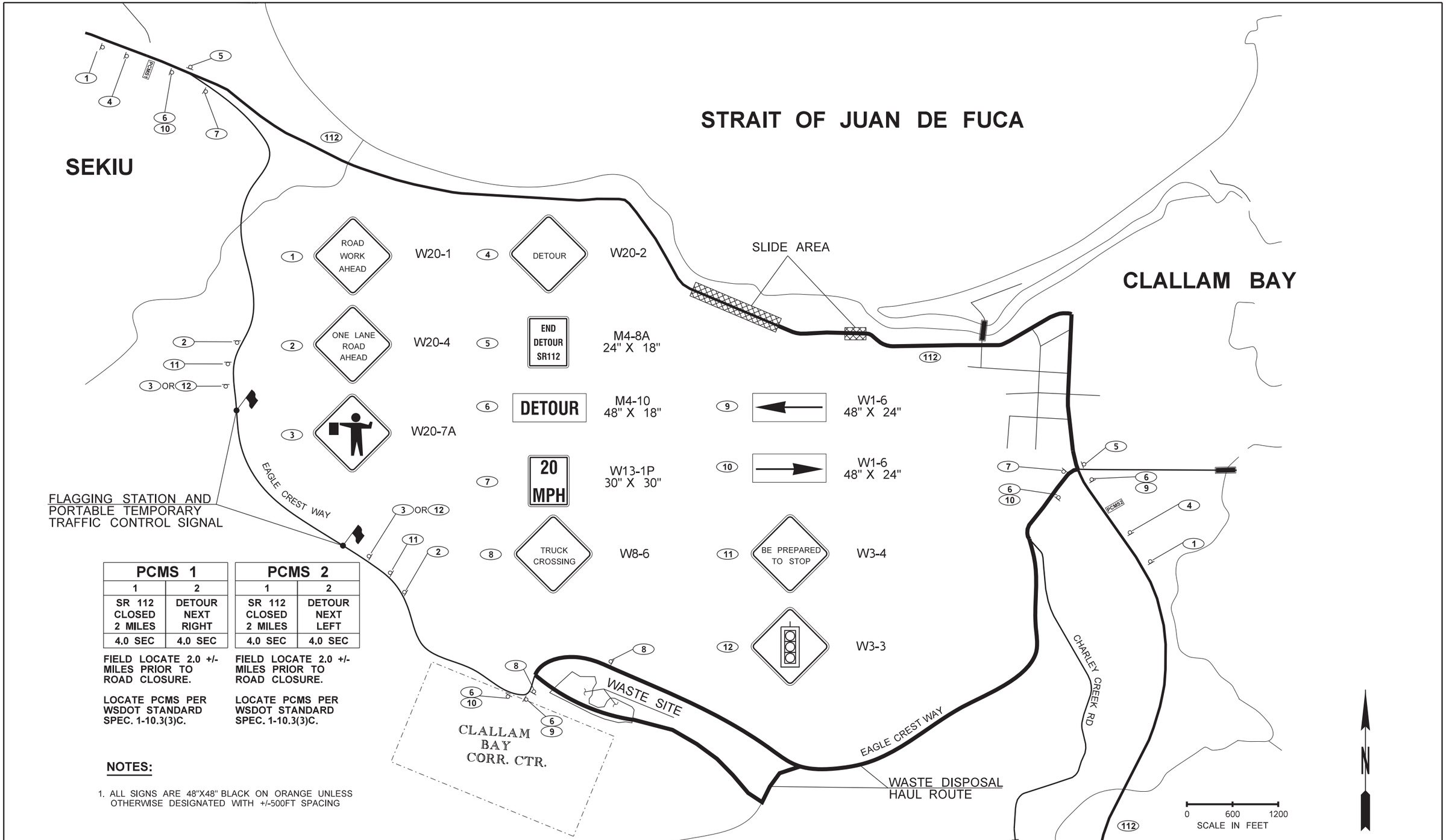

PCMS 1	
1	2
SR 112 CLOSED 2 MILES	DETOUR NEXT RIGHT
4.0 SEC	4.0 SEC

FIELD LOCATE 2.0 +/- MILES PRIOR TO ROAD CLOSURE.

LOCATE PCMS PER WSDOT STANDARD SPEC. 1-10.3(3)C.

PCMS 2	
1	2
SR 112 CLOSED 2 MILES	DETOUR NEXT LEFT
4.0 SEC	4.0 SEC

FIELD LOCATE 2.0 +/- MILES PRIOR TO ROAD CLOSURE.

LOCATE PCMS PER WSDOT STANDARD SPEC. 1-10.3(3)C.

NOTES:

1. ALL SIGNS ARE 48"X48" BLACK ON ORANGE UNLESS OTHERWISE DESIGNATED WITH +/-500FT SPACING

FILE NAME	G:\2 PSE\XL6517 SR 112 Clallam Bay - Emergency Repair\CAE\CAD\ContractPlans\410-WZTCPlan\PS_TCP.dgn
TIME	11:58:15 AM
DATE	1/14/2022
PLOTTED BY	mckernd
DESIGNED BY	B. SLUIS
ENTERED BY	B. SLUIS
CHECKED BY	J. TAX, P.E.
PROJ. ENGR.	D. MCKERNAN, P.E.
REGIONAL ADM.	S. ROARK, P.E.

REVISION | DATE | BY

REGION NO. 10 | STATE WASH | FED.AID PROJ.NO.

JOB NUMBER 22C501

CONTRACT NO.

LOCATION NO. XL6517

P.E. STAMP BOX DATE

P.E. STAMP BOX DATE

Washington State Department of Transportation

SR112
CLALLAM BAY
EMERGENCY REPAIRS

TRAFFIC CONTROL PLAN

Plot 4

PLAN REF NO TCP1

SHEET 7 OF 7 SHEETS